Published: 11-May-2011

Body Repairs - General Information - Body Repairs

Description and Operation

General Information

Introduction

The body plays a significant role in the increasing trend of ever more rapidly changing model variants. The different customer groups are strongly influenced by the design and shape of the body. At the same time the stability of the body plays the most important part in ensuring passenger and driver safety. Lightweight construction, alternative materials, composite materials, plastics and appropriate joining processes are all design features that characterise modern Land Rover vehicle bodies.

In terms of manufacturing technology, modern safety cell bodies can be produced almost without any problems. Land Rover guarantee high quality standards by ensuring that mechanical strength properties are tried and tested in numerous computer simulations, crash tests, by testing materials and by employing sophisticated manufacturing technologies. In the event of repairs it is vital that the production quality standards are upheld. This requires a well-equipped workshop, and places particular emphasis on the qualifications of the workshop technicians. Up-to-date knowledge of current manufacturing technologies and continuous training on new repair methods and techniques are vital for high-quality body repairs. The model-specific repair manuals and the general repair techniques provide valuable support when undertaking body repairs.

Always follow the repair instructions published in this manual. Failure to observe this instruction can result in serious impairment of vehicle safety. All specified safety requirements must be met after the work has been carried out.

Vehicle design

The body

The Freelander 2 body is manufactured like a conventional monocoque. Two monosides are welded to the floor, roof and bulkheads, creating a strong, single structure. Dual Phase (DP), and Bake Hardened (BH), steels are used in the side panel reinforcements. DP steel is also used for the rear of the front side member, for added strength in front and side impacts. The roof structure can accommodate a roof opening panel. When a sunroof is not fitted, the outer roof panel is a single large steel pressing with styled swages to add strength and prevent booming.

The safety of the driver and the passengers is paramount for every body design. There are two key safety aspects in the body:

- Safety passenger cell
- Crumple zones

Safety passenger cell

- Stable pillars, rocker panel and door profiles.
- Side impact protection in the doors.
- Doors are designed to open even in the event of extreme deformation.

Crumple zone

- Dynamic absorption of deforming forces.
- Protection of the passenger cell.

Vehicle Design

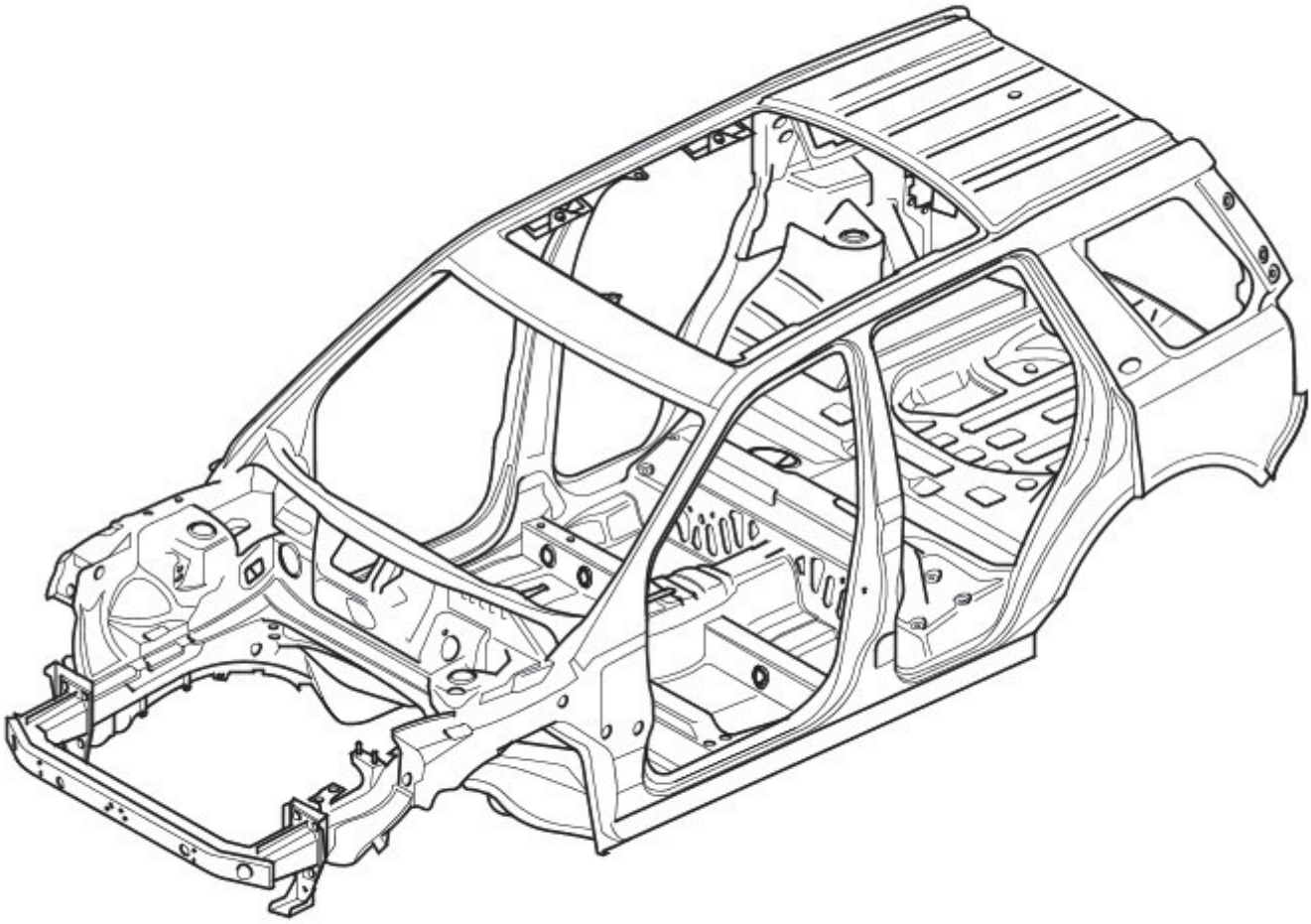

E89233

Item	Part Number	Description
1		Bodyshell

High Strength Steels

Most modern vehicles are constructed from a number of different steels, partly to obtain an optimised body, (collision, safety, rigidity, fuel economy, etc).

Steels are divided into several groups according to their tensile and yield strength, that is to say the force necessary to bring about plastic deformation of the material.

Yield Summary

Yield is the strength at which the metal changes from elastic to plastic in behaviour, the point of no return.

Tensile Summary

Tensile strength is the breaking strength of a material when subjected to a tensile (stretching) force, the point of no return.

Dual Phase (DP) steel falls into both the VHSS and EHSS classifications, dependant on grade of DP.

Steel Type	Yield Strength
Mild Steel (MS)	Maximum Yield point up to 180 MPa
High Strength Steel (HSS)	Steel With a Yield Point up to 280 MPa
Very High Strength Steel (VHSS)	Steel With a Yield Point up to 380 MPa
Extra High Strength Steel (EHSS)	Steel With a Yield Point up to 800 MPa
Ultra High Strength Steel (UHSS)	Steel With a Yield Point greater than 800 MPa

Welding Ultra High Strength Steel

Ultra high strength steel requires welding equipment which can achieve the following equipment settings.

Spot Welding

Information to follow.

MIG Brazing

When mig-brazing use the following type of welder meeting the specifications shown: Fronius Trans Plus Synergic 2700 4 R/Z/AL MIG Welder, with CuSi3 (DIN 1733) 1.0mm filler wire with setting parameters 4, which is 92 Amps, Wire feed 4.6 m/min. Shielding gas L1 = pure Argon (DIN 439).

Steels used in body structure

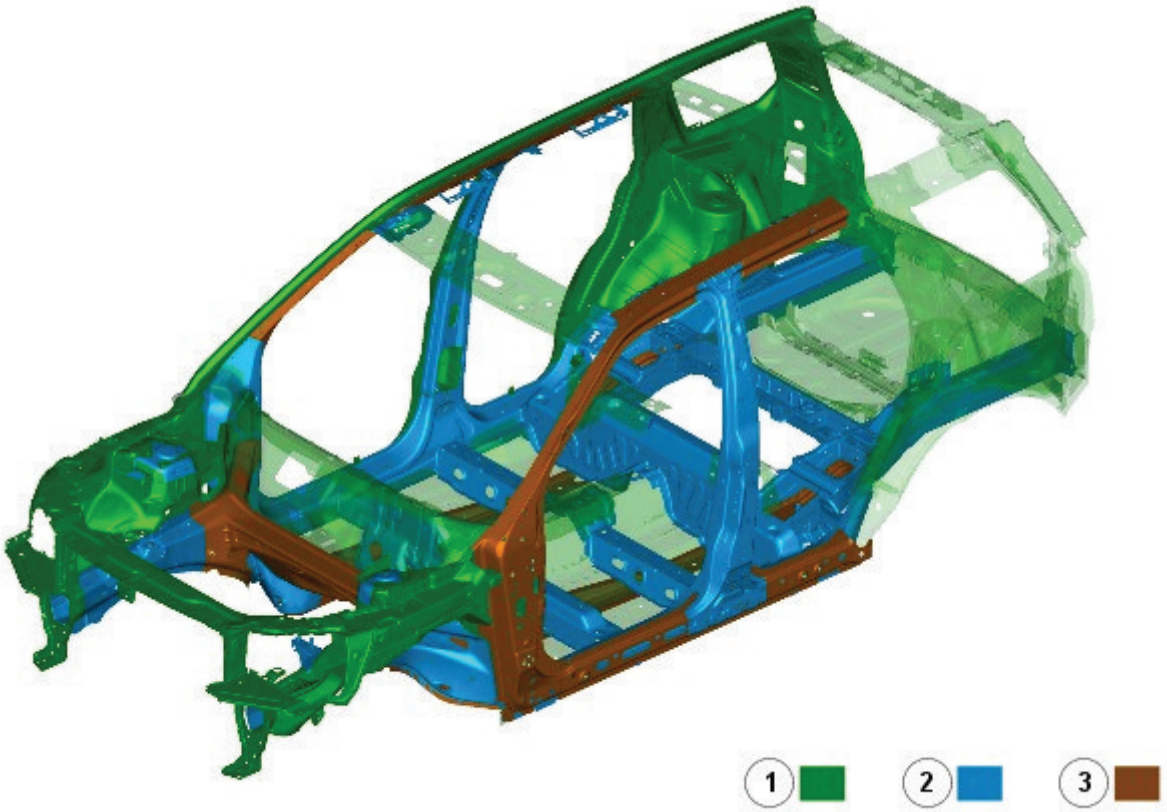

E92284

Item	Type of Steel
1	Soft Steel (SS)
2	High Strength Steel (HSS)
3	Extra High Strength Steel (EHSS)

• NOTE: The addition of DP600 (EHSS), for the side panel reinforcement "ring frame", and the rear of the front side member, gives the body greater strength in a front or side impact.

• NOTE: When installing outer side panels, A-Pillar, B-Pillar, rocker panel, quarter panel, they must be slot brazed where they adjoin their inner, reinforcement, panels.

• NOTE: The size of the slots are to be 20mm x 8mm and 30mm apart. Slots should be installed in accordance with this spacing. Where this is not possible, due to the indents in the panel, the slot should be made in the location of the original spot weld.

Side panel

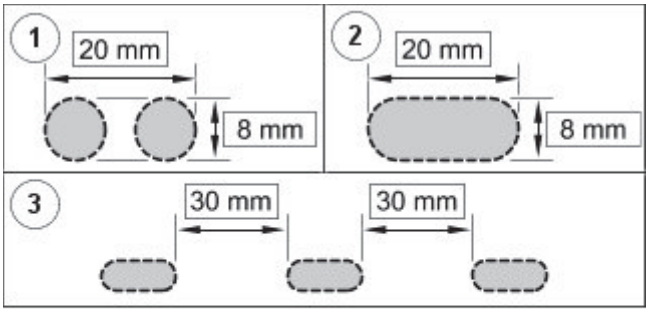

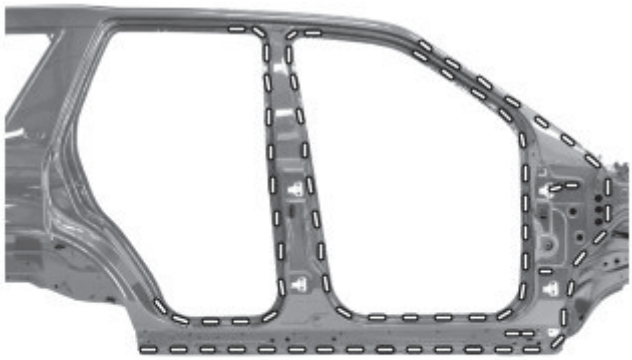

E89257

Item	Description
1	Drill 2 x 8mm holes to form basis of slot
2	Mill out to form 20mm x 8mm slot
3	Slots spaced at 30mm intervals

• NOTE: Mig brazing is carried out at a temperature of 650°C to 950°C. To avoid degradation of the ultra high strength steel material properties, the temperature must be below 950°C.

Mig braze the slot(s) using a Fronius Trans Plus Synergic 2700 4 R/Z/AL MIG Welder, with CuSi3 (DIN 1733) 1.0mm filler wire with setting parameters 4, which is 92 Amps, Wire feed 4.6 m/min. Shielding gas L1 = pure Argon (DIN 439).

Dress the surface of the weld cap (brazed slot) with 60/80 grit belt sanders.

Accident damage and diagnosis

General notes

- Exact diagnosis of the extent of the damage enables proper repair planning.
- All body repairs must be carried out in accordance with the guidelines in this Body Repair Manual.
- The stability and strength properties of the body must be taken into account during body repairs. The body has exact defined deformation patterns that must not be affected by any repair work.
- For instance, the crumple zones absorb the bulk of the impact energy. If any unprofessional repair techniques or methods are used in these areas then this can pose a fundamental threat to vehicle safety.

Hidden damage

- As well as looking at external indicators like flaked off paint, it is vital to check for hidden body damage or deformation that is not visible from the outside. Large attached parts like bumpers and inner fenders often need to be removed to allow accurate assessment of damage to underlying body parts.

Gap dimensions

Gap dimensions offer another alternative for diagnosis by visual inspection. If any changes or misaligned edges are apparent, then this usually indicates that the dimensions of the affected part are incorrect.

Changes in gap dimension

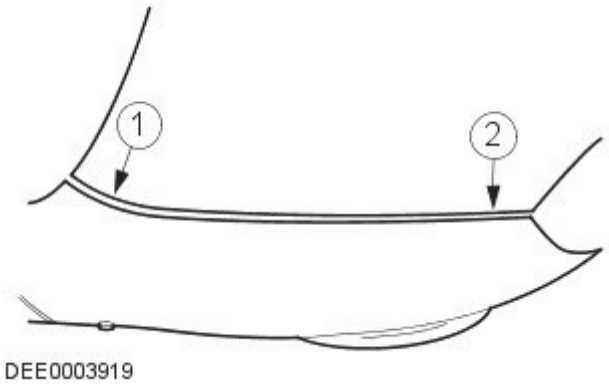

Item	Part Number	Description
1	-	Gap too wide
2	-	Gap too small

Impact effects on the body

• NOTE: Vehicle components like drive shafts and trailer attachments transfer forces. If a vehicle is subjected to a rear impact then all connected body parts and mechanical components (e.g. transmission mountings) should be thoroughly checked. Electronic components should be checked to ensure that they still operate correctly.

Furthermore it is possible to deduce the overall extent of damage from the direction and magnitude of the impact forces. This does however require extensive body-specific knowledge.

If, for instance, an impact occurs at the front left-hand side member, then the right-hand side member is usually also affected as a result of the rigid body-shell design (crossmember). Often the length of this side member will not have changed, but because of the rigid body-shell design it may have moved from its original position (often only by a very small amount). If any deviations are present this can usually be detected by checking the gap dimensions between door and fender or by checking for changes in dimension.

In the case of more severe impacts, the front part of the body cannot absorb all of the impact energy, and the passenger cell is also deformed. Here the impact energy is transferred via the side member to the A-pillar (see diagram). This results in deformations in the area of the roof and the door rocker panel.

The body reacts quite differently to side impacts where there is hardly any crumple zone. As the passenger cell is extremely stable, there are comparatively few local deformations at the site of the impact. However, the impact forces are transferred to the entire vehicle floor, which often results in so-called "banana damage", where the vehicle is bent into a banana shape.

Impact energy is transferred via the side member to the A-pillar

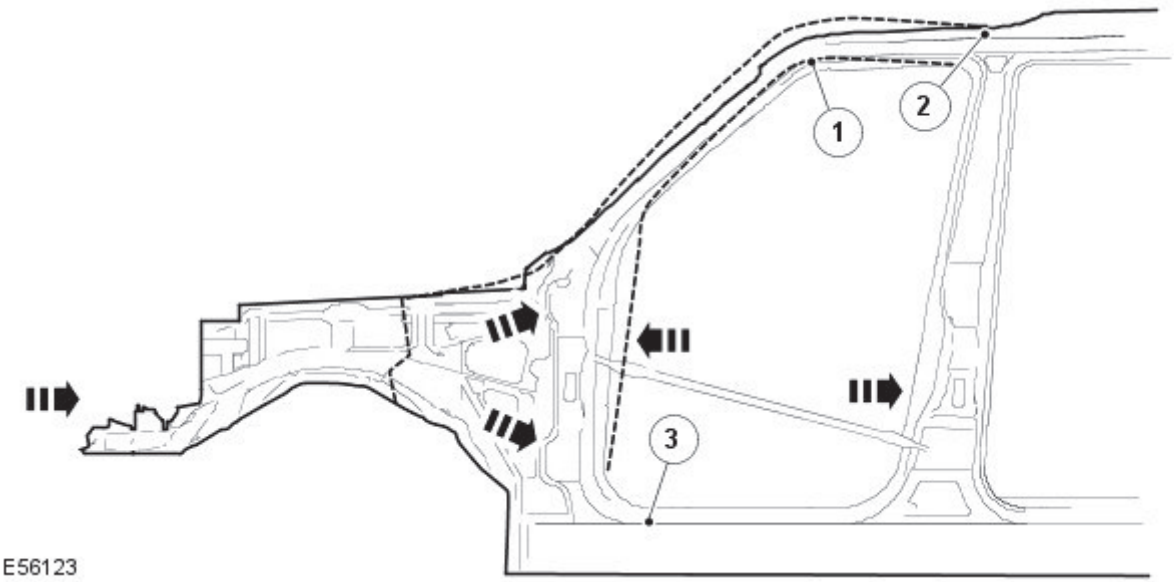

Item	Part Number	Description
1	-	Deformation area - roof rail
2	-	Deformation area - roof
3	-	Deformation area - door rocker panel

Body measurements

Measuring options

- Comparison measurements can also be made on the outside of the body. Depending on the damage, comparison measurements and diagonal measurements can be carried out using compass, telescopic rod, tape measure or ruler.

- • NOTE: The same reference points must be chosen on both sides when checking for changed dimensions (e.g. bores, edges, beads/swage lines etc).

  All of the important external body dimensions are listed in Tolerance Checks.
  For additional information, refer to: Body and Frame (501-26 Body Repairs - Vehicle Specific Information and Tolerance Checks, Description and Operation).

- Measurements with a measuring/straightening jig.
- A measuring/straightening jig is required for accurate measurements of the body. The measuring systems are categorised by their means of operation:
- Mechanical measuring system.
- Optical measuring system.

Quick and accurate measuring results can be obtained using computerised measuring systems.

A minimum of three intact measuring points on the body are required for measurements of length, width and height dimensions.

In some cases this may mean making the measuring points accessible. All of these measuring systems can be used to make body measurements, provided all the equipment is available.

Planning a repair

The following decisions have to be made before the repairs are started:

- Does the vehicle need to be put on a straightening jig, or can it be straightened by other means?
- Does the body need to be measured?
- Do aggregates like engine or axles need to be removed?
- • NOTE: It is preferable to repair body parts rather than to renew them, as this keeps the complete body-shell intact.

  Which body parts need to be renewed?
- Which body parts can be repaired?

Obtaining spare parts

The availability of spare parts often determines how easily the body repairs can be carried out. The following procedure is recommended:

- Obtain all the data for the vehicle, including type, vehicle identification number, trim code, engine identification letters, initial registration etc.
- Establish all of the metal parts that need to be renewed.
- Establish all of the attached parts that need to be renewed, including small parts like rivets, clips etc.

Straightening repairs

WARNING: The use of heat when pulling to straighten body panels, (such as side members), is not recommended. Longitudinal pulling, (hot or cold), is also not recommended. A small amount of side to side pull is permissible, (cold).

When any type of pulling or straightening operation is performed it is important to observe for any movement in adjacent panels.

A panel must retain its strength and integrity, if there is any doubt the panel must be renewed.

Straightening repairs are often required to restore the body to its original shape after an accident. This can be done with:

- Alignment jigs.
- Universal straightening and measuring jigs.
- Welding jig system.

The following points must be followed to ensure that the repairs are carried out professionally and that all the dimensions are correct after the repairs have been carried out.

- Structure:
  - The repair sequence depends on the individual repair plan (taking any necessary disassembly work into account).
  - Clean the attachment areas.
  - Anchor the vehicle free of stress on the relevant system.
  - Support the aggregates to take strain off the body.
  - Decide on at least three measuring/mounting points that are undamaged and as far apart as possible (for basic adjustment).
  - Check the dimensions of the measuring/mounting points.
- Straightening:
  -
  • NOTE: Check dimensions and gaps continuously during straightening.

  A body is always straightened in the opposite direction to that of the impact. Always carry out straightening repairs with the complete body shell assembled (do not cut out any parts beforehand). Carry out the straightening work in several stages. This prevents the risk of over stretching or of welded joints tearing out. During the individual straightening steps, relieve tension by striking with an aluminium hammer while the part is subjected to a tensile load (in the area of pre-determined folding points, dents, welded joins etc.).
- Special features:
  - Ultra high strength steel cannot be straightened due to its brittleness and must always be replaced.

Cutting out body parts

Depending on how the parts are joined/connected, different tools are suitable for cutting/separating body parts.

Spot-weld mill

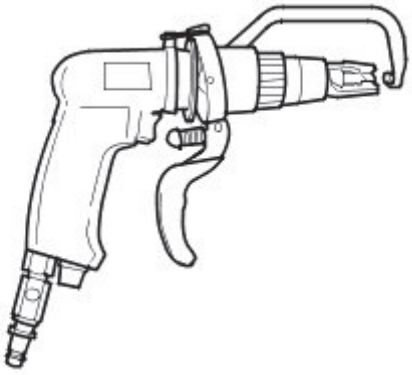

DEE0003924

• NOTE: All other parts like interior equipment, window glass etc. must be protected against flying sparks.

• NOTE: Ensure that the milling depth is set correctly to prevent the remaining flange from being weakened.

Rod sander

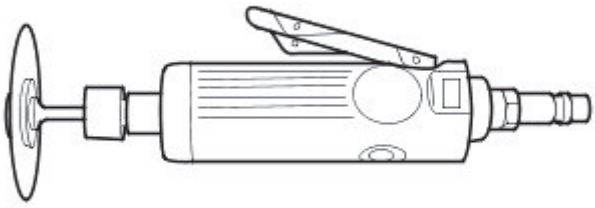

DEE0003925

• NOTE: Wear protective clothing. Protect any vulnerable body or glass areas against flying sparks. Remove explosive materials from the vicinity.

Any spot welds that are inaccessible for the spot-weld mill (diameter > 8 mm) should be ground out using a rod sander. The same applies to MIG spot welds or seams.

Short stroke saw

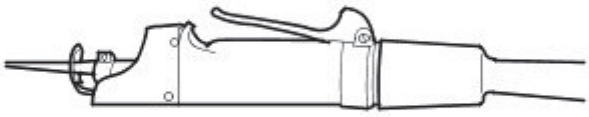

DEE0003926

• NOTE: Underlying metal parts, wiring harnesses, hoses etc. must not be damaged - remove them beforehand if necessary.

Body saws are particularly versatile and are therefore very suitable for making severance cuts on body parts.

Reciprocating saw

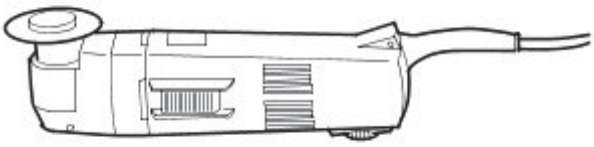

DEE0003927

In addition to the short stroke saw, the reciprocating saw can be used. With this, it is possible to make narrow and straight cuts to an exact depth.

Carrying out the repairs

Butt joint

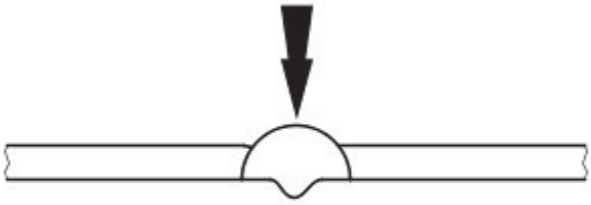

DEE0003929

• NOTE: The severance cut should always be kept as short as possible on sectional replacement. Only cut at the severance lines shown in the repair chapters.

Do not make any cuts near reinforcements or pre-determined folding lines.

- Prepare parts remaining on the vehicle/new parts.
  - Reshape the adjoining surface of any dented body parts that are to remain on the vehicle using a hammer and a counterhold (ensure that the old part matches the shape of the new part). Grind off left over spot welds or seams with an angle grinder.
  - Cut the new parts to shape.
  - If necessary punch or drill holes for mig plug welding.
  -
  • NOTE: Do not use a welding torch to remove paint residue (the heat could cause the metal to deform).

  Grind all joining flanges to bare metal on both sides. Do not use an angle grinder for this purpose (this could weaken the metal and damage the zinc layer). Suitable tools: rotating wire brush, belt sander or plastic disc.
  - Apply welding primer liberally to all weld flanges.
  - The primer must be well stirred before use.

• NOTE: When using aerosols, take care not to contaminate adjacent parts with spray mist.

Fit the new part.

- It must be ensured that the new part fits exactly to the specified dimensions. Suitable equipment:
  - Alignment jig.
  - Universal measuring system.
  - Jig system.
  - Ruler or tape measure.
  - Compass.
  - Frame dimensions can be found in the model-specific repair manuals.
- • NOTE: Any attached body parts that require accurate alignment and fitting must be incorporated in this step; for instance bumpers, seals, headlamps, rear lamps and lock assembly components. If this is not done carefully it may result in water leaks, wind noises and substantial follow-on work.

  Ensure that edges line up with adjacent parts and check that gaps are consistent (compare left and right-hand sides). Make sure that the shape of the vehicle is retained.

Secure the new part

- • NOTE: The need for subsequent follow-on work can be significantly reduced if aligning and tack-welding are carried out with due care.

  Depending on accessibility the following methods for securing are available:

- Grip pliers (set of).
- Screw clamp (set of).
- Self-tapping screws.
- Tack welds.

- Use a staking tool or a screwdriver to ensure that the edges of sectional replacements of profiled parts line up. The edge is then tack welded to ensure that it lines up.

Aligning and tack weld

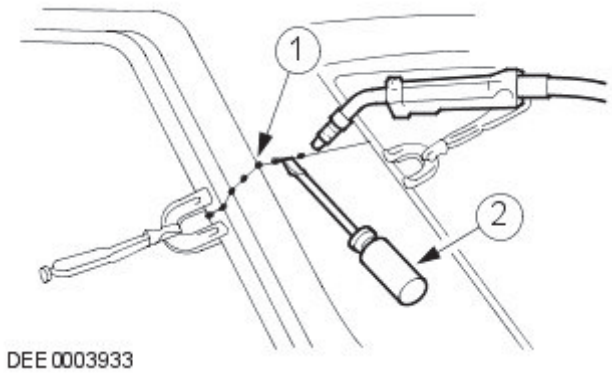

Item	Part Number	Description
1	-	Tack welds
2	-	Using a screwdriver to align

- Longer joins are usually tack welded to prevent the panel from warping. It is important to carry out the tack welds in the correct sequence (see diagram).
- Weld in the new part following the instructions in the repair manual.

Correct tack welding sequence

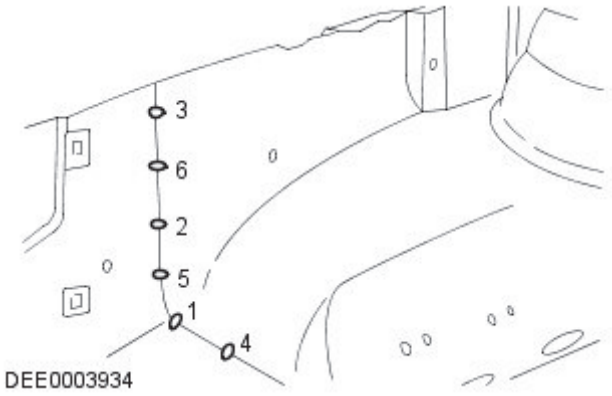

Follow on repairs/corrosion protection

- This step basically covers the following work:
  - Grinding welded seams.
  - Priming any bare metal.
  - Sealing welded seams.
  - Applying underbody protection.
  - Sticking damping matting in place.
  - Filling cavities with cavity wax.
  -
  • NOTE: See corrosion protection section for cavity wax application areas.

  Cavity wax (after painting).

Panel Beating

Fundamentals of panel beating

- Before carrying out any sectional replacements or complete replacements of body panels, always check carefully whether the damaged panel(s) can be rectified by panel beating.
- Panel beating is usually the easiest and most economical method of repairing a damaged panel.

Examples of applications of different panel beating techniques:

- Aluminium hammer and mallet.
  - Advantage: Low risk of over-stretching the panel.
  - Used for repairs of small dents on panels that are accessible from both sides.
  - These two panel beating tools are usually used for "finishing repairs".

Fine straightening with an aluminium hammer and a universal dolly

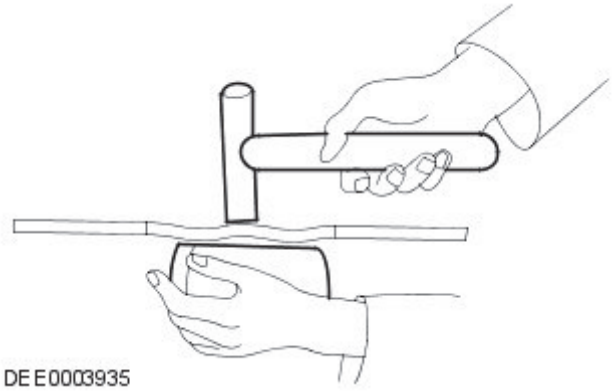

- Sliding hammer
  - If the damaged panel is only accessible from the outside, use a sliding hammer to pull it back into shape. The discs or studs needed to mount the sliding hammer are welded onto the bare surface. Dents in the panel can be flattened out using controlled application of the sliding hammer.

Heat-treatment of panels

- It is usually inevitable that some parts of the body panels show excess material as a result of mechanical strain. If there are any areas of excess material this will cause localised instabilities due to differences in tension. These localised instabilities can be stabilised by applying heat-treatment techniques.
- • NOTE: This does not apply to high-strength low alloy steel, ultra high strength steel and aluminium.

  Rule: Flattening panels by heat-treatment reduces the amount of excess material by more than they were originally stretched.

Different heat-treatment techniques.

• NOTE: Different heat-treatment techniques are used depending on the amount of excess material.

- Flattening using a flame.
  - A welding torch is used if the material excess extends over a larger area (torch size 0.5 - 1.0 mm). Use a soft flame.
  - The surface of the metal is briefly spot-heated and then immediately cooled with a wet sponge.
  - Requirement: Ability to handle a welding torch safely and knowledge of annealing colours of steel.
  - Advantage: No damage to the surface of the metal.
- Flattening using a flame, supported by hammer and counterhold.
  -
  • NOTE: The flattening effect is increased by speeding up the heating and cooling stages.

  If the material excess is concentrated, then the flattening effect can be increased after heating by carefully using an aluminium or wooden hammer.
  - Requirement: Ability to recognise material tension by feeling the surface that is to be flattened.
- Flattening using a carbon electrode.
  - If panel areas are only accessible from one side, or the panel is only slightly destabilised, then the preferred method is flattening using a carbon electrode.
  - Requirement: Bare metal surface.
  - Disadvantage: Scarring and hardening of the surface.
- Flattening using a copper electrode.
  - Small, sharp dents that face outwards can be worked on with a copper electrode.
- Flattening using a flame and body files.
  -
  • NOTE: When applied correctly, this method can be used with all the attached parts still in place (roof headlining, wiring harnesses etc.).

  Small, soft dents (only slight stretching): Working at the edges of the dent in an inward spiral pattern, the dent is heated with an oxyacetylene torch (torch size 1 - 2 mm, excess gas flame) to approx. 250° C.
  - Working rapidly with a body file extracts heat from the edge area until the dent is flattened. Preferably alternate between two files. This increases the amount of heat that can be extracted.

Safety measures

- The electronic control modules (ECM) fitted to vehicles make it advisable to follow suitable precautions prior to carrying out welding repair operations. Harsh conditions of heat and vibration may be generated during these operations which could cause damage to the modules. In particular, it is essential to follow the appropriate precautions when disconnecting or removing the airbag RCM.
- Do not allow electronic modules or lines to come into contact with the ground connection or the welding electrode.
- Seat belt anchorages are a safety critical. When making repairs in these areas, it is essential to follow design specifications. Note that extra strength low alloy steel may be used for seat belt anchorages. Where possible, the original production assembly should be used, complete with its seat belt anchorages, or the cut line should be so arranged that the original seat belt anchorage is not disturbed.
- All welds within 250mm (9.842) of seat belt anchorages must be carefully checked for weld quality, including spacing of spot welds.
- Remove the battery before carrying out welding work in its vicinity.
- Utmost care must be taken when welding near the fuel tank or other components that contain fuel. If the tank filler neck or a fuel line must be detached to allow access for welding work, then the fuel tank must be drained and removed.
- Never weld, on components of a filled air conditioning system. The same applies if there is a risk of the air conditioning system heating up.

- Connect the ground connection of the electrical welder directly to the part that is to be welded. Ensure that there are no electrically insulating parts between the ground connection and the welding point.
- Adjacent vehicle parts and adjacent vehicles must be shielded against flying sparks and heat.

Resistance spot welding

Where resistance spot welds have been used in production, they must be reproduced with new spot welds in replacement where possible. All such reproduction spot welds should be spaced 25 to 30mm apart.

Setting up the equipment and co-ordinating the welding parameters.

- Equipment:
  - Follow the equipment manufacturer's instructions for the equipment settings.
  - Select the correct electrode arms (as short as possible).
  - Align the electrode arms and tips exactly.
  - Electrode tips should be convex (rough shaping with a file, fine shaping with a sanding block).
- Body:
  - Ensure that the flanges to be joined lie perfectly flat to one another.
  - Prepare a bare metal joint surface (inside and outside).
- Notes on technique/method:
  - Carry out a test weld on a sample piece of the material coated in welding paste.
  - If any metal parts are located between the electrode arms then there will be a loss of induction and therefore power (adjust current setting).
  - The power needs to be adjusted for high-strength low alloy steel.
  - Repeated welding on old welding points often leads to poor quality welds.
  - Keep the electrode tips as near as possible to an angle of 90° to the contact surface.
  - Keep the pressure on the electrodes for a short period after finishing the weld.
  - The electrodes work best if their shape is convex. Clean the contact surface of the electrodes regularly.

Resistance spot welding panels where the total thickness is 3 mm or more

For all repairs to modern Land Rover vehicles, spot-welding equipment should be suitable for reliable welding of zinc-plated, high-strength and high-tensile steels in three or more layers, up to 5 mm total thickness. If these requirements are not fulfilled, plug welding must be used for safety reasons. The electrical specifications (current, resistance, heat) of the spot-welding equipment have different validity, depending upon the type of equipment. Therefore, it is essential that the manufacturer's instructions are observed with regard to the actual welding performance.

MIG/MAG welding

Setting up the equipment and co-ordinating the welding parameters.

- Any joins that are MIG/MAG welded in production must also be MIG/MAG welded during repairs. Also during repairs, some resistance spot welds need to be replaced by plug welds.
- If access is difficult, or if a suitably powerful spot welder (see above) for total panel thicknesses of 3 mm or more is not available, resistance spot welding must be partially replaced by plug welding during repairs. In this case, the increased time needed and the correspondingly more demanding corrosion protection requirements, must be taken into account.
- Welding repairs can only be carried out properly if the equipment is set up correctly and all the welding parameters are co-ordinated.
- Equipment:
  - Set up the equipment as directed by the manufacturer.
  - The hoses must be untwisted.
  - The core must be free of abraded rod particles.
  - The gas and current nozzles must be free of slag and scale residue.
  - Pay attention to the quality of the welding rod and the throughput of gas.
- Body:
  - Ensure that the joint surface is perfect.
  - Prepare a bare metal joint surface.
  - Maintain the correct gaps (formation of roots).
- Notes on technique/method:
  -
  • NOTE: The increased application of heat during MIG welding destroys the welding primer/zinc layer over a much larger area than during resistance spot welding, as a result of which much more care needs to be taken when applying anti-corrosion protection afterwards.

  • NOTE: A test weld should always be carried out to ensure that the welded joint is not just a surface connection.

  Attach the ground cable right next to the welding point (ensure that good contact is made).
  - During plug welding start welding on the lower panel to ensure adequate penetration.

Plug welding

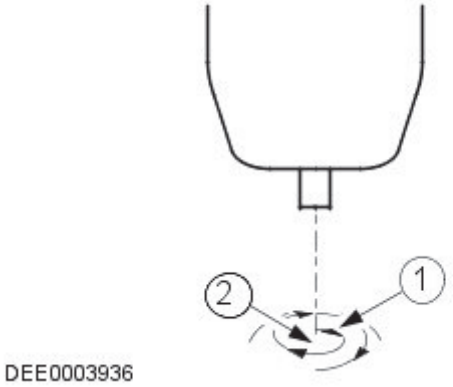

Item	Part Number	Description
1	-	Welding direction: circular pattern working from the inside outwards
2	-	Welding starting point: centre of hole on lower panel

Bonded glazing

- - The windscreen, side and rear windows are bonded directly onto the window frames on the body and liftgate.
  - The windows are bonded primarily for reasons of adhesive strength. Bonded glazing provides additional torsional stiffness to the body.

Adhesive bonding of bonded windows

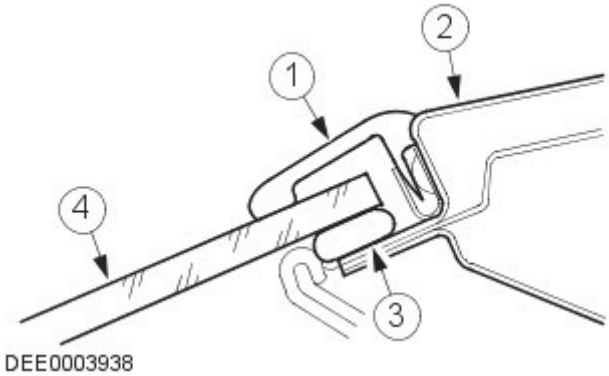

Item	Part Number	Description
1	-	Rubber strip
2	-	Window frame
3	-	Adhesive
4	-	Window glass

Removing and installing bonded windows

Safety measures

- The following safety measures must always be followed to prevent personal injury:
  - Wear protective gloves and arm protection.
  - Wear protective goggles.

Preparations

- Before cutting out a bonded window, undo and remove any attached parts in the cutting area that are at risk, e.g. trim panels and decorative strips, as well as all electrical connections.
- Mask any painted areas that are adjacent to the window.
- Cut off any surplus adhesive, as this makes it easier to cut out the window.
- Secure vertical windows against dropping out.

Cutting out the window

- Cut into the adhesive bead at easily accessible points using the cutting tool.
- Carefully guide the cutting tool around the window, cutting through the adhesive bead.
- Avoid touching the window frame and the body flange.
- Use cup suction tools to lift the cut-out window out of the window aperture.

General preparations for bonding

- Follow the manufacturer's instructions.
- Cut back the remaining adhesive bead on the metal flange to a residual height of about 1mm. Do not touch or clean the cut surface afterwards.
- Carefully rectify any paint damage (apply primer and top coat).
- Renew the window stops as necessary.

Bonding the window glass

- Apply an even bead of adhesive to the window or to the body flange.
- Insert the window glass into the window aperture and centre it (2 technicians required).
- Check the gaps.
- • NOTE: Open the windows and doors while the window is left to dry and do not move the vehicle (slamming doors creates excess pressure which could cause the window to become loose).

  Use adhesive tape to prevent the window from falling out or slipping.

Finishing operations

- Reconnect all electrical connections and check that the components operate correctly.
- Install the attached parts and check that the fit is accurate and secure.
  - Carry out a visual inspection to ensure that the gaps and joints are even.
- Thoroughly clean the window glass.

Protective equipment and safety at work

- Various safety measures and legal requirements must be met when carrying out repairs. All regulations relating to health and safety at work must be followed.

Welding safety precautions

- The following safety precautions must be observed to prevent the risk of personal injury:
  - Safety hood (face protection).
  - Welding shield.
  - Safety gloves.
  - Safety shoes.
  - Extraction unit for welding smoke.
- Welding should always be carried out in well ventilated areas. A fire extinguisher must also always be within reach.

General body repair safety measures

Extraction unit

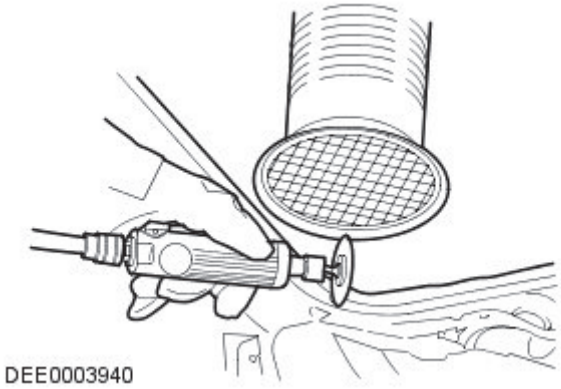

- Sealing compound, underbody protection etc. must not be burned off with a naked flame. This would produce toxic gases. If for instance PVC is burned, then gases containing hydrochloric acid are produced. For this reason a suitable extraction unit should always be used when performing grinding, welding or soldering work.
- Always ensure good ventilation when working with materials that contain solvents, wear breathing equipment and use an extraction unit.
- Ear defenders should always be worn when cutting, grinding or straightening metal, as the noise levels can reach or even exceed 85 - 90 dB(A).
- Take care not to look directly into any laser measuring systems, for instance used to measure the under body.
- When removing components from a vehicle mounted on a lifting ramp, watch out for a shift in its centre-of-gravity. When first placing the vehicle on the ramp, take into account that it may need to be secured against tipping over.
- Chains and chain clamps must be secured with safety ropes during straightening work.

Safety rope

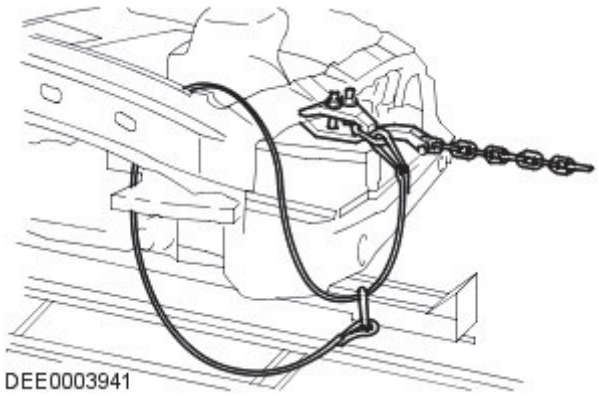

Published: 11-May-2011

Body Repairs - Corrosion Protection - Corrosion Protection

Description and Operation

General

The corrosion protection provided in production must be carefully maintained and/or reproduced during and after body repair work. It is only then that the long-term warranty against penetrative corrosion damage can be assured.

Only Land Rover original bodywork components and Land Rover approved repair materials (sealer, paint etc.) are to be used for bodywork repairs.

Land Rover Original Parts

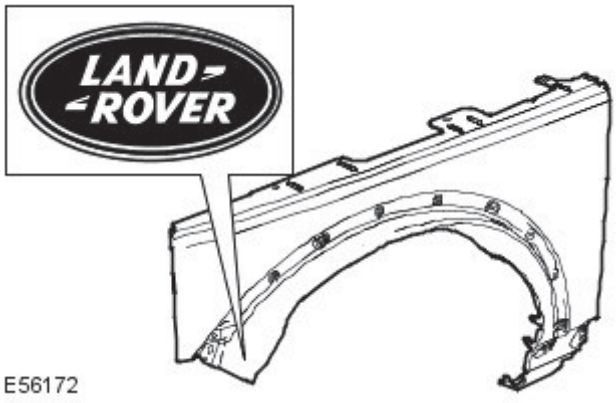

All Land Rover bodywork components have a cathodic base coating. Individual bodywork components are zinc plated on one or both sides (in different areas depending on vehicle model).

Together with elastic paint coating, this guarantees an optimum, highly resistant protection against corrosion caused by the impact of small objects such as gravel.

• NOTE: If possible, the individual protective layers (zinc, cathodic base coat) on Land Rover bodywork components must not be damaged or destroyed by sanding or other mechanical operations.

If hairline cracks at "bodywork connection areas" appear after reshaping work (e.g. at door hinges), it must be ensured that the corrosion protection provided in production is recreated. The complete paint covering must be re-created if necessary. The same applies to reshaping work on heavily profiled bodywork components (e.g. floor pan). Renew or touch-up the paint coating, sealing beads and underbody protection as necessary.

After repair, any interior surfaces which are no longer visible or accessible must be primed before cavity wax is applied. To be certain of an even coating on inner surfaces, careful application of spray (twice, with drying time in-between) must be carried out throughout the whole cavity.

If bodywork panels are strongly heated during repair work, this will invariably result in damage to or even destruction of the applied corrosion protection material. The effectiveness of the cavity protection material is reduced if heating occurs. Reworking of the affected areas is therefore vital.

Welded areas should be made good before corrosion protection is applied.

The corrosion protection measures to be taken when bodywork components are renewed are described on the following pages.

Corrosion Protection of New Components

All new components must be inspected for transport or storage damage such as scratches or dents. The following operations may be necessary, depending on the extent of damage:

Undamaged New Component

- Do not grind the cathodic primer.
- Thoroughly clean with silicone remover and rub dry.

Slightly Damaged New Component

- Sand out scratches.
- Finely sand the surrounding surface.
- Thoroughly clean with silicone remover and rub dry.
- Apply corrosion protection primer to bare areas.

Damaged New Components (bumps and dents)

- Beat out the dented area and sand down to bare metal.
- Apply polyester filler (only onto bare metal).
- Apply filler.
- Lightly sand the whole component.
- Thoroughly clean with silicone remover and rub dry.
- Apply corrosion protection primer to bare areas.

The clinched flanges on the hood, doors, tailgate and liftgate must be sealed with clinched flange sealer, if this is not already applied.

Weld Components

Use a stripping disc to remove the cathodic primer on the inside and outside of the area to be welded. The stripped area should be kept as small as possible, retaining as much of the cathodic primer as possible, taking care not to damage the zinc coating.

Apply Welding Primer

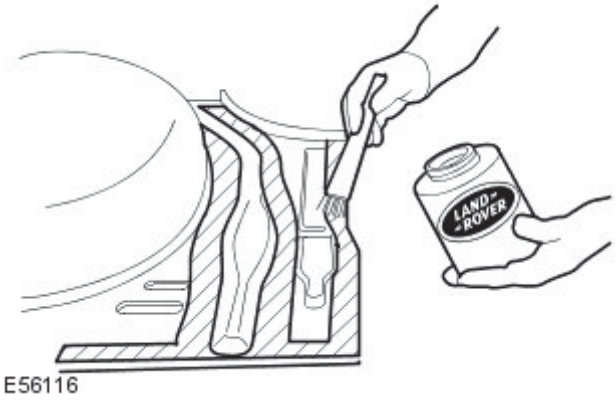

• NOTE: The welding primer must be stirred well or shaken before application.

Clean the repair area thoroughly (silicone remover).

Apply welding primer evenly to all weld flanges (old and new components).

• NOTE: The welding primer must be allowed to dry before welding is carried out.

All weld beads must be ground down after all welding is completed, taking care not to weaken the material.

Any unevenness at the joint must be made good.

If necessary, spot weld missing weld studs into position.

The vehicle must be completely cleaned of sanding dust and metal swarf because of the danger of corrosion.

Clean and prime all internal areas and those to be sealed.

• NOTE: The primer must be dry before sealing mastic or underbody protection is applied. Do not use thinners when applying sealing mastic (the mastic will not dry).

Partial Renewal

The procedure to follow when partially renewing components is the same as described in the section "Welded Components".

The main difference when components are partially, rather than completely renewed, concerns the preparation of butt or lap joints.

- When bodywork components are cut through, attention must be paid to the adequate removal of the paint and zinc coatings on inner areas. This specially applies to areas which are difficult to access internally.
- It is important for the weld quality that the inner area is bare metal. Zinc and paint residues in the weld area burn and cause serious hole formation during welding.
- If the zinc layer and the paint coating are not removed, the zinc and paint will burn during welding. The soot produced prevents satisfactory cavity protection.

Procedure

- The paint layer must be removed for a width of 30 mm from the line of the weld using a rotating tress wire brush.
- This operation must be carried out on both the new and the old parts of the bodywork.
- Depending on the bodywork component, a 10 mm width of the underlying zinc layer must also be removed along the weld line.

• NOTE: A flat scraper or a wire brush can be used instead of the rotating brush if the cavity is small. Do not use an angle grinder, which would weaken the structure.

Application of Cavity Wax Protection on a Door Rocker Panel After Partial Repair

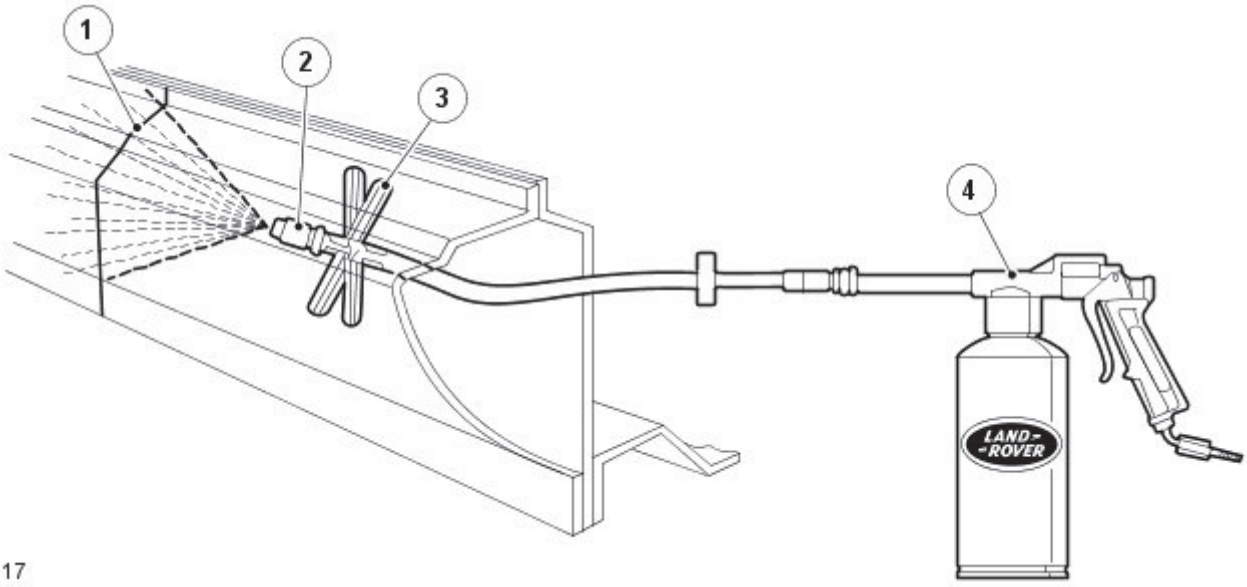

Item	Part Number	Description
1	-	Weld bead
2	-	Spray head
3	-	Distance maintainer
4	-	Spray gun

Classification of the different corrosion protection measures for dent removal

Corrosion Protection Method	Exterior Surfaces	Accessible Inner Surfaces	Inaccessible Inner Surfaces
Painting	X	X	
Cavity protection			X

Classification of Different Corrosion Protection Measures for Installation of New Components

Corrosion Protection Method	Weld Flanges Before Welding in Place (contact surfaces)	All Bare Sanded Areas	Weld Flange Area Accessible	Weld Flange Area Not Accessible
Welding primer	X			
Painting		X	X	
Clinched flange protection			X	
Cavity protection				X

Body Sealing Materials

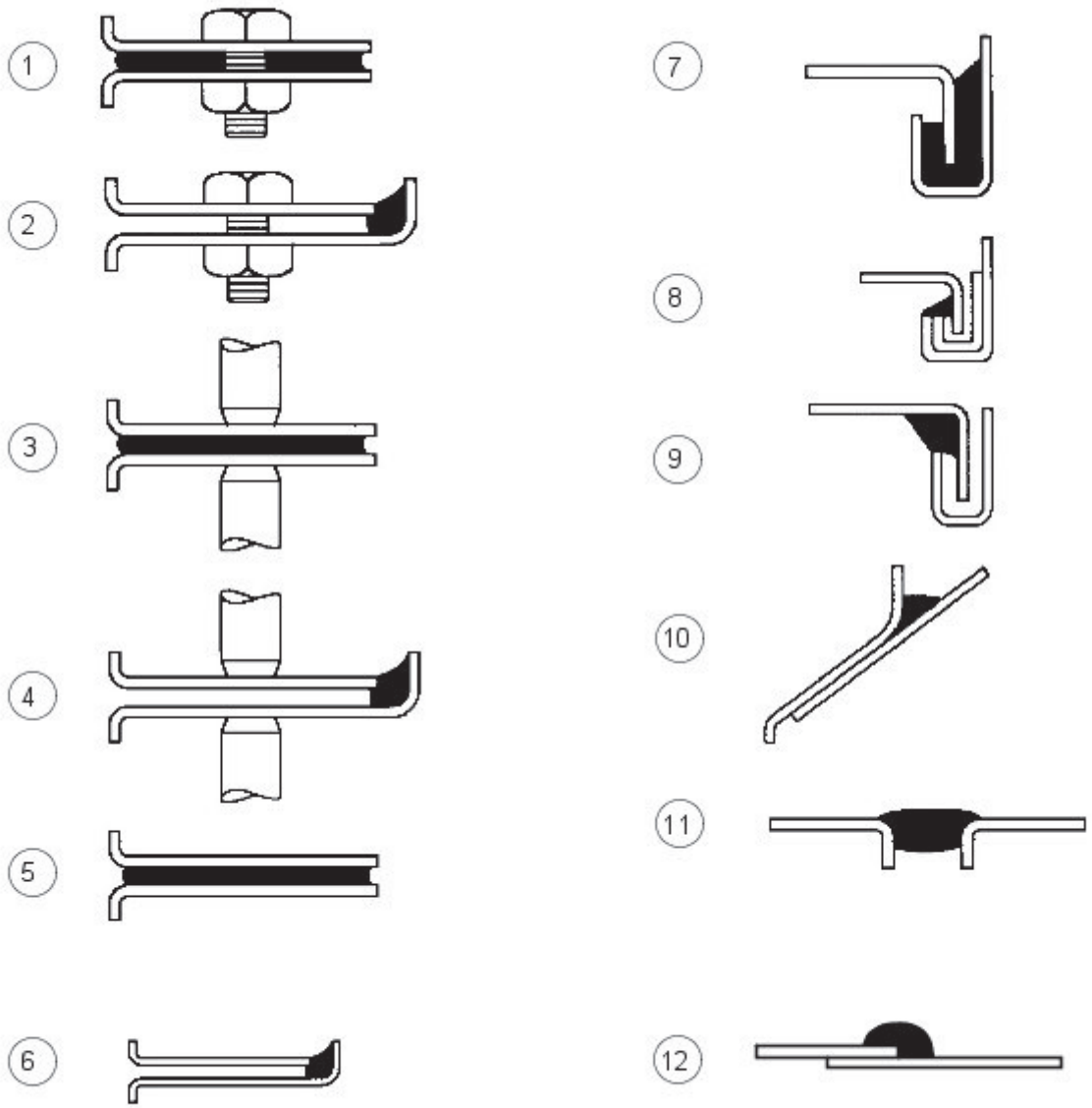

E56018

Item	Part Number	Description
1	-	Between Panels - Bolted
2	-	Panel Edge Bolted
3	-	Between Panels - spot welded
4	-	Panel edges - spot welded
5	-	Between panels - bonded
6	-	Panel edges - bonded
7	-	Clinch joints - type A
8	-	Clinch joints - type B
9	-	Clinch joints - type C
10	-	Gaps between panels - type A
11	-	Gaps between panels - type B
12	-	Lap joint

Approved Service Materials For Repair

Description - Usage	Supplier	Product Number
Sealing	-	-
Polyurethane cartridge extruded seam sealer - grey - **this is not a weld through product**	3M	08684
Polyurethane cartridge extruded seam sealer - white - **this is not a weld through product**	3M	08689
Polyurethane cartridge extruded seam sealer - black - **this is not a weld through product**	3M	08694
Polyurethane sachet 310ml - grey - **this is not a weld through product**	3M	08782
Polyurethane sachet 310ml - white - **this is not a weld through product**	3M	08787
Polyurethane sachet 310ml - black - **this is not a weld through product**	3M	08789
Polyurethane sachet 600ml - grey - **this is not a weld through product**	3M	08783
Polyurethane sachet 600ml - white - **this is not a weld through product**	3M	08788

Description - Usage	Supplier	Product Number
Polyurethane sachet 600ml - black - **this is not a weld through product**	3M	08793
Sprayable seam sealer 2K polyurethane 150ml - grey	3M	08823
Sprayable seam sealer 2K polyurethane 250ml - grey	3M	08800
Sprayable seam sealer MS polymer grey	3M	08851
Super seam sealer can - grey	3M	08537
Super seam sealer - brush	3M	08540
Butyl cartridge highly flexible for joints greater than 3mm - grey	3M	08645
Terostat 9100 (1K PUR) adhesive sealant	Teroson	153.65B
Terostat 9100 (1K PUR) adhesive sealant	Teroson	112.72C
Terostat 9100 (1K PUR) adhesive sealant	Teroson	129.19S
Terostat 9200 (1K PUR) adhesive sealant - black	Teroson	120.20Q
Terostat 9200 (1K PUR) adhesive sealant - black	Teroson	120.25W
Terolan light vehicle body sealant	Teroson	128.60D
Terostat 9320 sprayable seam sealant - grey	Teroson	139.15A
Terostat 9320 sprayable seam sealant - black	Teroson	139.16B
Terostat 9320 sprayable seam sealant - ochre	Teroson	139.17C
Terolan special sealant brushable	Teroson	179.70H
Terostat II sprayable sealant band	Teroson	193.00D
Terostat VII round profile plastic sealing band	Teroson	112.46Z
Terostat IX putty	Teroson	157.86J
MS Polymer Sealing	-	-
MS Polymer caulkable sealer - white	3M	0855
Terostat 9120 (MS Polymer) adhesive sealant - white	Teroson	102.78X
Terostat 9120 (MS Polymer) adhesive sealant - black	Teroson	113.23H
Terostat 9120 (MS Polymer) adhesive sealant - black	Teroson	104.41R
Seam Sealing Light	-	-
Drip Chek clear	3M	08401
Drip Chek heavy	3M	08531
Silicone Sealant	-	-
Terostat 9140 silicone sealant - transparent	Teroson	140.08B
Terostat 9140 silicone sealant - black	Teroson	140.04X
Body Caulking	-	-
Body caulking	3M	08568
Structural Adhesive	-	-
Two component epoxy adhesive	3M	08122
Manual applicator gun	3M	08190
Panel Bonding Adhesive	-	-
Panel bonding adhesive + (nozzle 08193)	3M	08115
Requires manual applicator gun + nozzle	3M	08117
Tape and Film	-	-
Acrylic tape PT1100 double sided - 6mm x 40m	3M	80318
Acrylic tape PT1100 double sided -9mm x 20m	3M	80319
Acrylic tape PT1100 double sided 12mm x 20m	3M	80320
Acrylic tape PT1100 double sided 19mm x 20m	3M	80322
Acrylic tape PT1100 double sided 25mm x 20m	3M	80323
Polyolefin adhesion promoter	3M	05917
Abrasion resistance film	3M	08210
Abrasion resistance film	3M	08219
Sealing Tape and Primer	-	-
Terotape seam sealing tape 8mm x 6mm	Teroson	8164590
Terotape seam sealing tape 10mm x 16mm	Teroson	8164600
Terotape primer 420ml	Teroson	8164610
Cavity Wax	-	-
Body shultz coatings - black - 1L can	3M	08861
Body shultz coatings - black - 500ml aerosol	3M	08877
Inner cavity wax aerosol (transparent)	3M	08909
Inner cavity wax aerosol (amber)	3M	08901
Inner cavity wax 1L can (amber)	3M	08911
Inner cavity wax 1L can (transparent)	3M	08919
Inner cavity wax 10L drum (amber)	3M	08921
Inner cavity wax 10L drum (transparent)	3M	08929
Terotex HV 200 extra spray - 1L can	Teroson	176.48
Terotex HV 200 extra spray - 10L tin	Teroson	179.40A
Terotex HV 200 extra spray - 60L barrel	Teroson	170.96J
Terotex HV 400 1L can	Teroson	169.65Q
Terotex HV 400 10L tin	Teroson	169.76C
Terotex HV 400 60L barrel	Teroson	169.85M
Teroson cavity spray 500ml aerosol	Teroson	155.71A
Underbody Wax	-	-
Terotex wax black 1L can	Teroson	114.59F
Protective wax	Teroson	122.73Q
Underbody Coating	-	-
Bodyguard stonechip coating (textured) can - black	3M	08868
Bodyguard stonechip coating (textured) can - white	3M	08878
Bodyguard stonechip coating (textured) can - grey	3M	08879

Description - Usage	Supplier	Product Number
Bodyguard stonechip coating (flat) can - black	3M	08158
Bodyguard stonechip coating (flat) can - grey	3M	08159
Anti chip coating smooth - grey	3M	08886
Terotex record black 1L can	Teroson	122.48N
Terotex record light 1L can	Teroson	165.53S
Terotex anti chip compound light (UBC) 1L can	Teroson	191.08V
Terotex anti chip compound black (UBC) 1L can	Teroson	191.32V
Trim Adhesive	-	-
Auto adhesive - aerosol - clear (trim)	3M	08080
Auto adhesive - brushable - clear (trim)	3M	08150
Contact adhesive - aerosol - amber	3M	08090
Corrosion Protection	-	-
Zinc spray	3M	09113
Zinc spray	Teroson	158.18T
Anti Corrosive Agent	-	-
Terotex HV 350 1L can	Teroson	141.78L
Terotex HV 350 10L can	Teroson	160.02T
Terotex HV 350 60L barrel	Teroson	160.01S
Sound Deadening	-	-
Sound deadening sheets	3M	08840
Terodem SP 100 alu	Teroson	190.33
Terodem SP 200	Teroson	190.55M
Terodem SP 300 50 x 50	Teroson	145.28R
Terodem SP 300 100 x 50	Teroson	134.29X
Flexible Part Repair	-	-
Flexible part repair material (FPRM)	3M	05900
Adhesives / Thread Locking	-	-
Lock N Seal 243 thread locking	Loctite	13701
Lock N Seal 243 thread locking	Loctite	14131
Lock N Seal 243 thread locking	Loctite	25684
Stud N Bearing fit 271	Loctite	13704
Stud N Bearing fit 271	Loctite	14130
Stud N Bearing fit 271	Loctite	25685
Pipe sealant 577	Loctite	16604
Pipe sealant 577	Loctite	25689
Pipe sealant 55	Loctite	31899
Gasket	-	-
Multi gasket	Loctite	25688
Silicone copper	Loctite	19245
Silicone copper	Loctite	82046
Silicone 596 black	Loctite	19242
Silicone 596 black	Loctite	59875
3020 gasket adhesive	Loctite	31458
NVH Baffle	-	-
Sikabaffle 278	SIKA	

Approved Service Material Supplier - Contact Details

3M

- 3M United Kingdom PLC
- 3M Centre
- Cain Road
- Bracknell
- Berkshire
- RG12 8HT
- Telephone (01344) 858000
- www.3m.com

Cooper Pegler

- Burgess Hill
- Sussex
- RH 15 9LA
- Telephone (014446) 42526

Sika Ltd

- Watchmead
- Welwyn Garden City
- Hertfordshire
- AL7 1BQ
- Telephone (01707) 394444
- www.sika.co.uk

SATA Spray Equipment

- Minden Industrial equipment
- 16 Greyfriars Road
- Moreton Hall

- Bury St Edmunds
- Suffolk
- IP32 7DX
- Telephone (01284) 760791
- www.sata.com

Henkel Loctite Adhesives Limited

- Technologies House
- Wood Lane End
- Hemel Hempstead
- Hertfordshire
- HP2 4RQ
- Telephone (01442) 278000
- www.loctite.co.uk

Teroson

- Henkel Ltd
- Apollo Court
- 2 Bishops Square Business Park
- Hatfield
- Hertfordshire
- AL10 9EY
- Telephone (01707) 635000
- www.henkel.co.uk

Underbody sealer

Under floor areas and the front part of the spare wheel well are treated with a plastisol PVC underbody sealer. This material is not suitable for re-treatment. When repairing areas of underbody sealer, strip the factory-applied underbody sealer back to a suitable break point. Ensure that a clean metal surface is exposed and that the edge of the existing adheres soundly to the panel.

Apply new underbody sealer between primer and surface paint operations. Apply seam sealer as necessary before application of underbody sealer. Ensure that blanking plugs and grommets in the floor pan (except those used for wax injection) are fitted before underbody sealer application. Refit any heat-fusible plugs which have been disturbed in repair with the aid of a hot air blower, or replace with rubber grommets

CAUTION: Ensure that suspension units, wheels, tires, power unit, drive shafts, exhaust and brakes (including all mounting points) are shielded prior to application of fresh underbody sealer.

Area of Underbody Sealer Application - Floor Pan

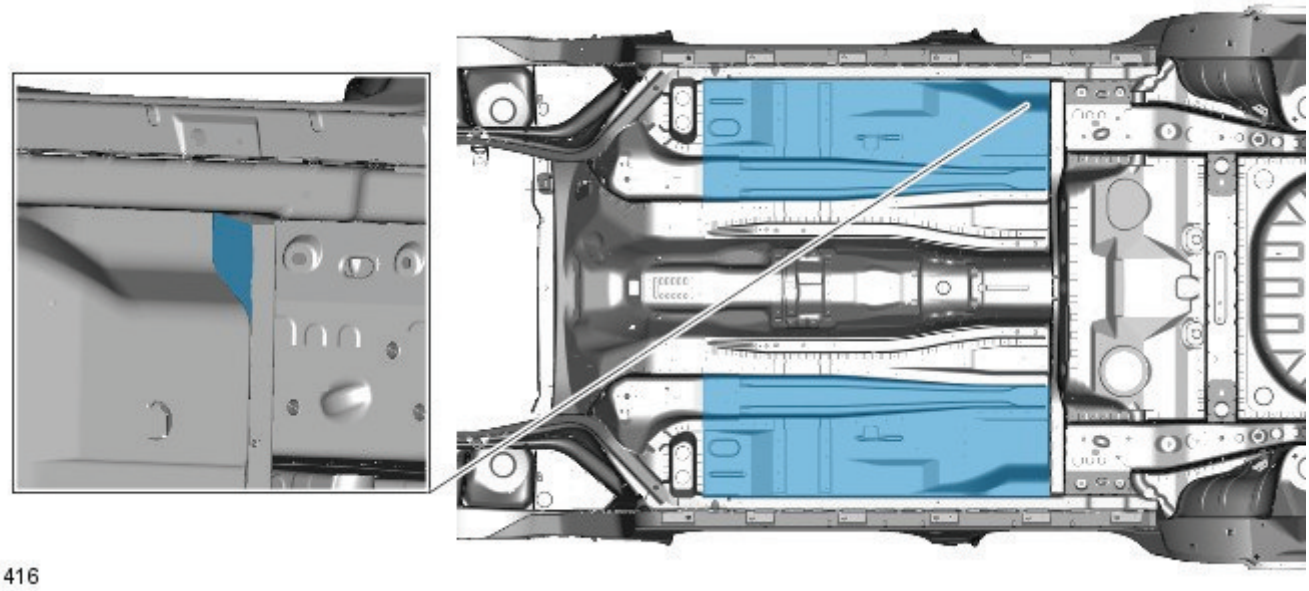

Area of Underbody Sealer Application - Spare Wheel Well

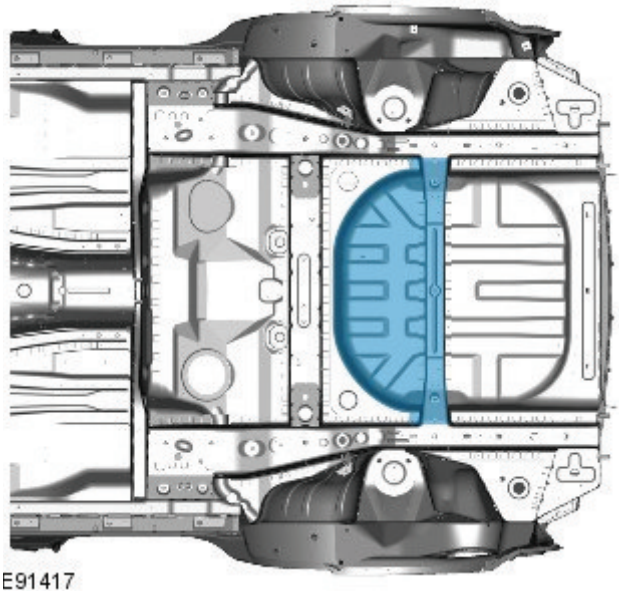

E91417

Precautions During Body Repairs and Handling

Take care when handling the vehicle in the workshop. Underbody sealers, seam sealers, underbody wax and body panels may be damaged if the vehicle is carelessly lifted.

Proprietary Anti-corrosion Treatments

The application of proprietary anti corrosion treatments in addition to the factory-applied treatment could invalidate the corrosion warranty and should be discouraged. This does not apply to approved, compatible, preservative waxes which may be applied on top of existing coatings.

Fitting Approved Accessories

When fitting accessories ensure that the vehicle corrosion protection is not affected, either by breaking the protective coating or by introducing a moisture trap.

Do not screw self-tapping screws directly into body panels. Fit suitable plastic inserts to the panel beforehand. Always ensure that the edges of holes drilled into panels, chassis members and other body parts are protected with a suitable zinc rich or acid etch primer, and follow with a protective wax coating brushed onto the surrounding area.

Do not attach painted metal surfaces of any accessory directly to the vehicle's bodywork unless suitably protected. Where metal surfaces are bolted together always interpose a suitable interface material such as weldable zinc rich primer, extruded strip, or zinc tape.

Steam Cleaning

Due to the high pressure/temperature generated by steam cleaning equipment, there is a risk that certain adhesives and corrosion prevention material may become softened or liquified.

Take care not to allow the steam jet to dwell on one area, and keep the nozzle at least 300mm from the panel surface.

CAUTION: Do not remove wax or lacquer from underbody areas during repairs.

Inspection During Maintenance Servicing

It is a requirement of the corrosion warranty that the vehicle is inspected for corrosion by a Land Rover Authorised Repairer during a routine service, to ensure that the factory-applied protection remains effective.

Rectify any bodywork damage or evidence of corrosion found during inspection as soon as is practicable, both to minimise the extent of the damage and to ensure the long term effectiveness of the factory-applied corrosion prevention treatment.

Underbody Protection Repairs

Whenever body repairs have been carried out, ensure that full sealing and corrosion protection treatments are reinstated. This applies both to the damaged areas and also to areas where protection has been indirectly impaired, as a result either of accident damage or repair operations.

Remove corrosion protection from the damaged areas before straightening or panel beating. This applies in particular to panels coated with wax, PVC underbody sealer, sound deadening pads etc.

CAUTION: Do not use oxy-acetylene to remove corrosion prevention material. Large volumes of fumes and gases are liberated by these materials when they burn.

The most common method of removal is by means of a hot air blower with an integral scraper. High temperatures can be generated with this equipment which may cause fumes. Take care during its use.

Structural Adhesive

CAUTION: When separating a joint with metal to metal adhesive, it is important to avoid distortion. Heat gradually until the bond weakens sufficiently to permit panel separation - do not apply excessive heat.

• NOTE: When spot welding through metal to metal adhesive, take particular care to adjust the equipment setting to ensure a suitable weld.

Metal to metal adhesive is applied to critical joint areas during factory assembly. The material used is a high temperature, heat cured, nitrile phenolic which serves to bond two metal surfaces and also to seal the joint against ingress of dust, moisture and fumes. This material is not suitable for service use and, during repair, should be substituted by an approved structural adhesive. For panel specific information and to identify the areas of structural adhesive application in repair, refer to the relevant sheet metal removal and installation procedure.

Expanding Foam Acoustic Seals

Expanding foam acoustic seals are used in various closed-sections of the body to improve vehicle refinement. The seals are installed during the vehicle body manufacture and expand during the paint process up to ten times original size, thus locking them into position. They are located such that they prevent noise accentuation along a section and reflect air borne noise away from the cabin.

The seals have spilt functionality depending on location. The seals located at the base of the body pillars have a primary function of preventing water ingress when wading. Their secondary function is to prevent noise and dust ingress.

The seal around the fuel filler has a primary function of preventing both fuel and water ingress. With a secondary function of preventing noise and dust ingress.

The remaining seals primary function is to prevent noise accentuation along a section and reflect air borne noise away from the cabin.

Another advantage of the seals is that they marginally increase the overall stiffness of the body and its structural performance in case of a crash.

The seals are manufactured from an expandible polymer.

Replacing Expanding Foam Acoustic Seals

As paint oven temperatures used in a repair workshop are significantly lower than those that are used during manufacture of the vehicle, (the temperatures are not sufficient to expand the foam), a different process is required to replicate the foam in repair.

If a repair disturbs the expanding foam acoustic seal it must be reinstated. If access allows, (whether a new seal is fitted or the original is reused), acoustic foam should be injected after paint refinishing. If access is not possible, or it is not practical to apply expanding foam due to the nature of the repair, a suitable flexible PU sealer should be applied around the seal and the corresponding body panel/s prior to assembly. In all cases the application of foam / sealer should form a seal between the expanding foam acoustic seal and any adjacent panelwork.

Expanding Foam Acoustic Seals in the Fender Apron Upper Panel

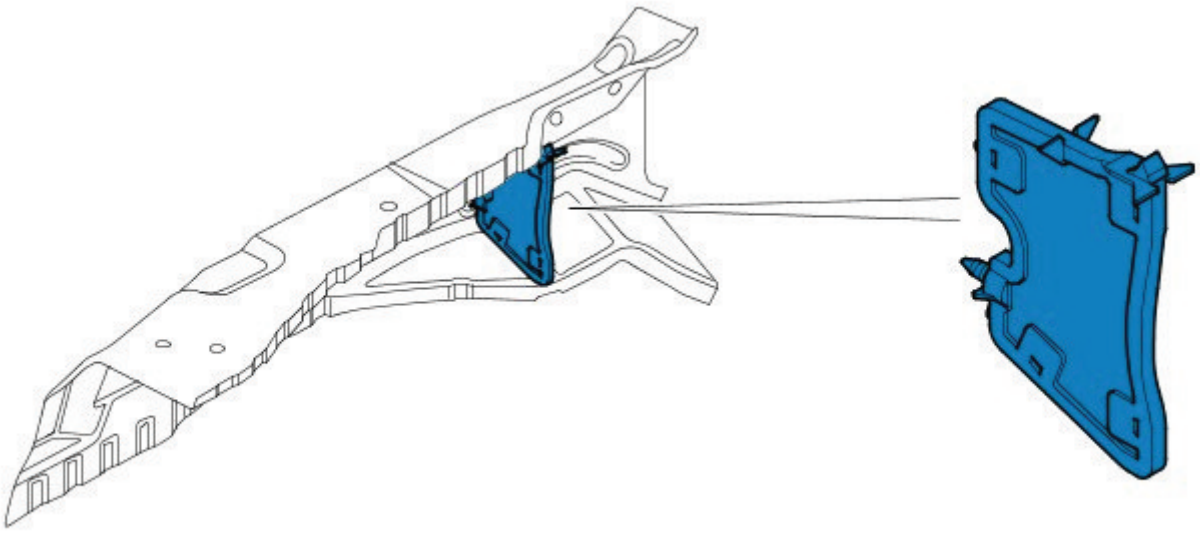

E91420

Expanding Foam Acoustic Seals in the Side Panel Reinforcement

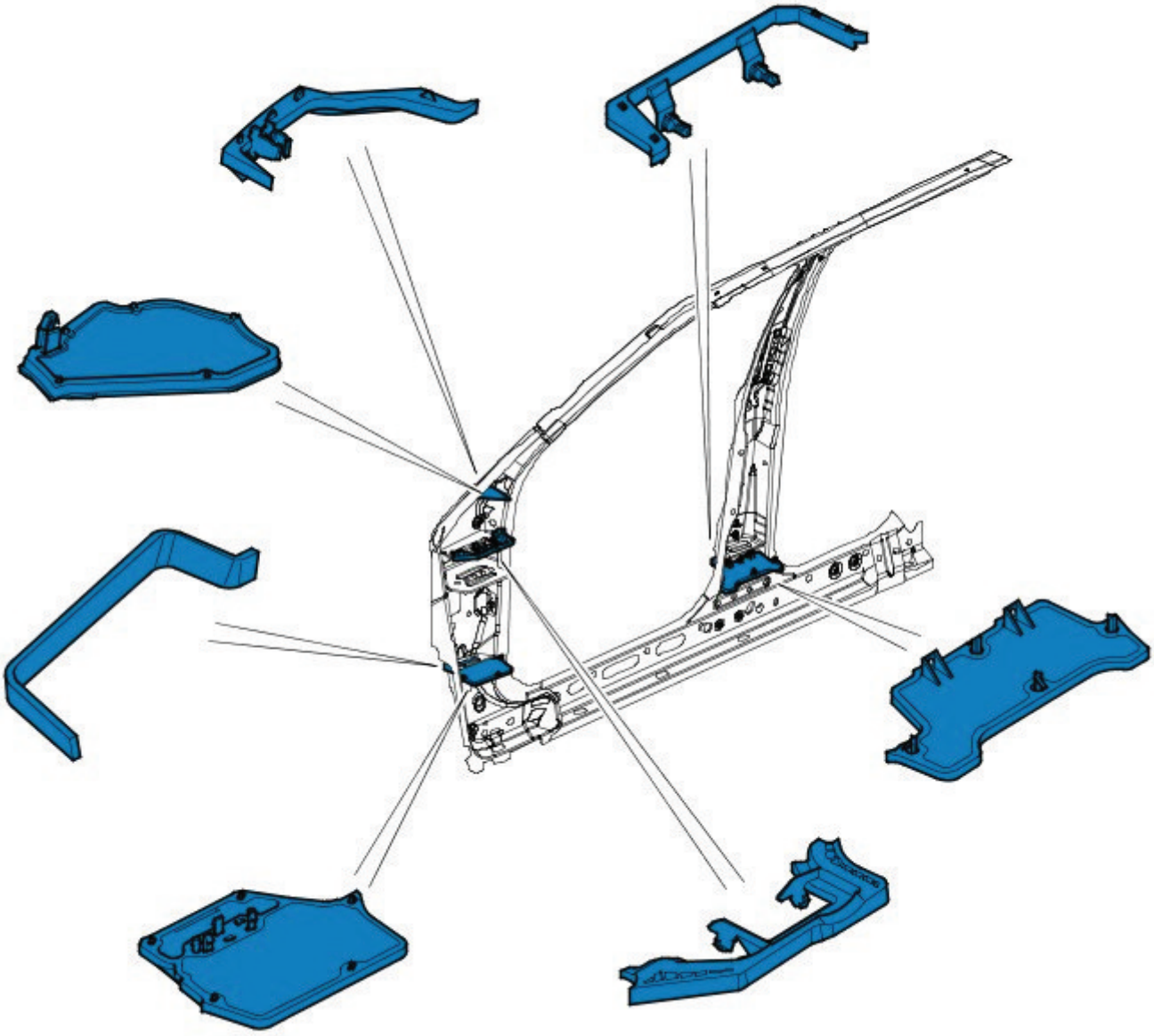

E91419

Expanding Foam Acoustic Seals in the Quarter Panel

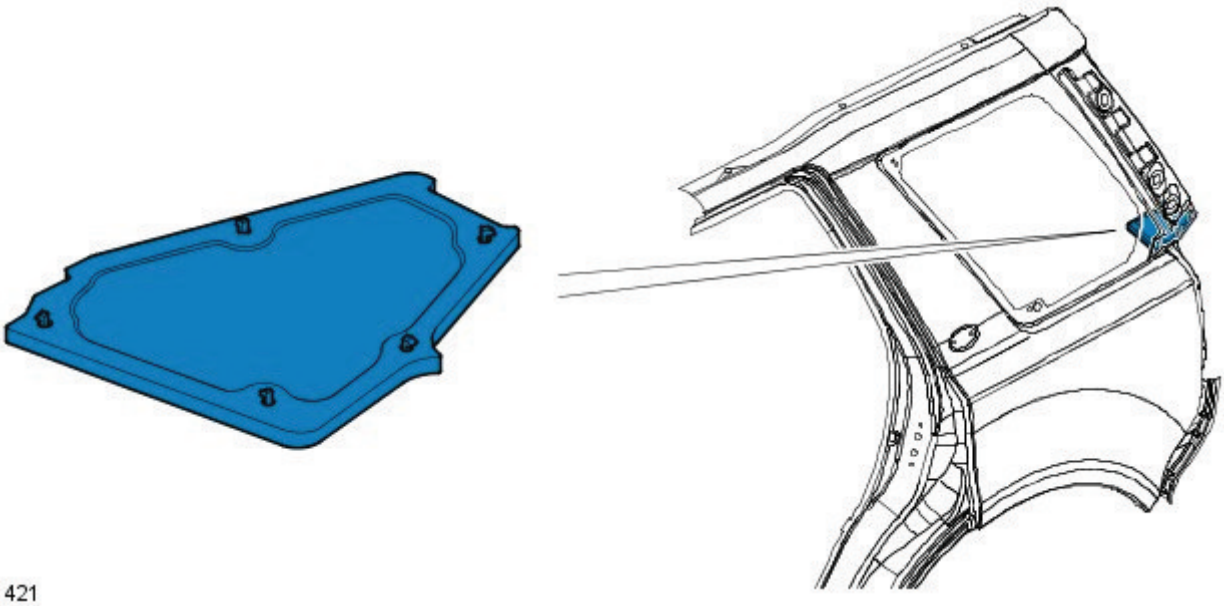

E91421

Expanding Foam Acoustic Seals in the Inner Quarter Panel and Wheelhouse

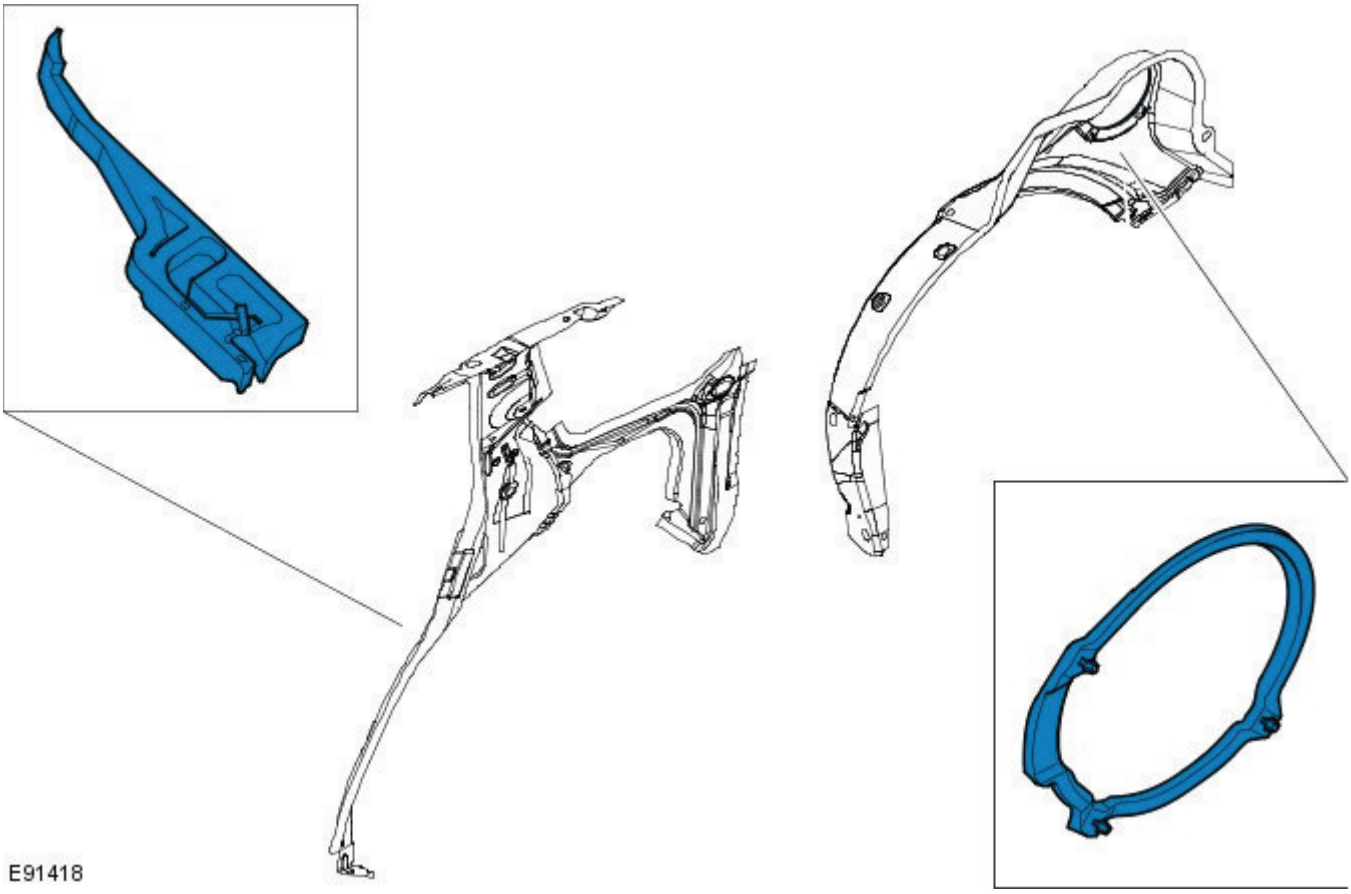

Expanding Foam Acoustic Seals in the Back Panel Inner

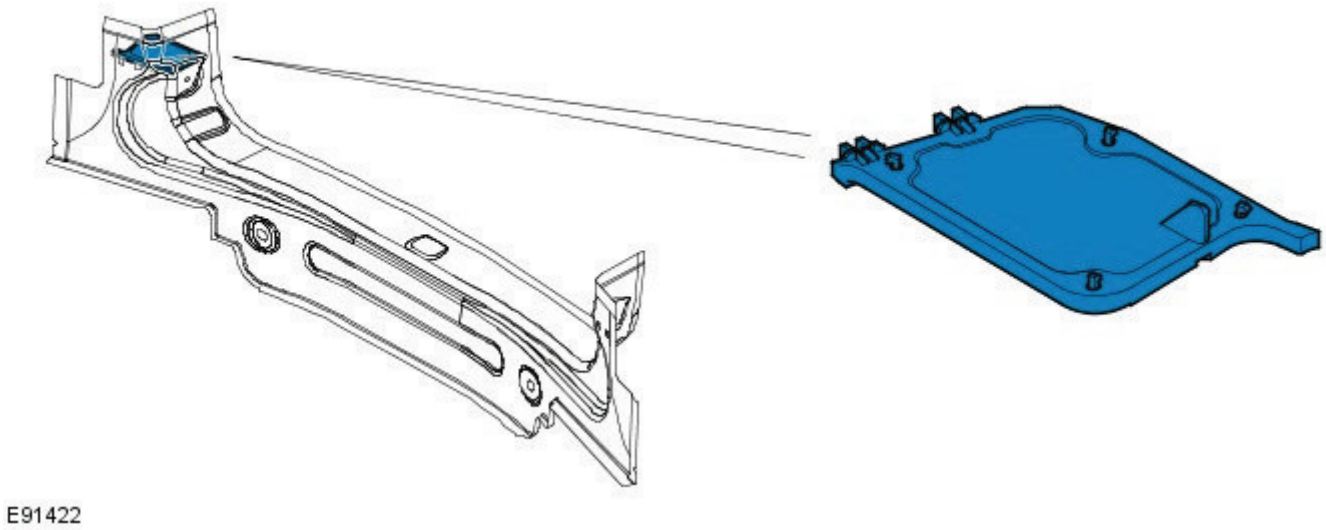

Seam Sealer

A heat cured, PVC based sealant is applied to specific joint seams during factory assembly. This material is not suitable for service use and during repair and should be substituted by an approved seam sealer.

• NOTE: Where seams are inaccessible following the reassembly or fitting of components, ensure that a paste-type seam sealer is applied to such seams. Certain seams also become inaccessible after the completion of panel repairs. In such instances apply seam sealer and paint before final assembly.

Apply seam sealers after the application of primer and before the application of top coat. The sealer must form a continuous bead, with the profile of the bead dependent on the type of seam. If the seam sealer is applied with a brush take particular care to maintain the required coverage of the seam.

Ensure that all accessible repair seams are sealed following a repair. Damage to a vehicle often flexes areas of the body remote from the impact. As a result the seam sealer in these areas may be disturbed by subsequent straightening and repair operations. Check all seams in the vicinity of the area undergoing repair for evidence of cracked seam sealer, then clean out as required and apply fresh seam sealer using the following procedure:

- Clean the affected seam and re-treat any exposed metal areas with a suitable etch phosphate primer.
- Treat affected area with an etch-acid primer.
- Apply appropriate seam sealer as necessary.
- apply appropriate colour coat (and under body sealer as applicable).

Provided access is adequate, apply seam sealer to both sides of a repair joint. Where access is limited to one side only, (e.g. box section), treat the affected box member with cavity wax.

Cavity Wax

After repairs, always re-treat these areas with an approved cavity wax. In addition, treat all interior surfaces which have been disturbed during repairs whether they have been treated in production or not. This includes all box members, cavities and door interiors.

Before wax injection, ensure that the cavity to be treated is free from any contamination or foreign matter. Where necessary, clear out any debris.

Ensure that cavity wax is applied after the final paint process and before refitting any trim components.

During application ensure that the wax covers all flanges and seam areas and that it is adequately applied to all repaired areas of both new and existing panels.

It should be noted that new panel assemblies and complete body shells are supplied without wax injection treatment. Ensure that such treatment is carried out after repairs.

Effective cavity wax protection is vital. Always observe the following points:

- Complete all paint refinish operations before wax application.
- Check the spray pattern of injection equipment.
- Mask all areas not to be waxed.
- Remove body fixings, such as seat belt retractors, if contamination is at all likely.
- Move door glasses to fully closed position before treating door interiors.
- Treat body areas normally covered by trim before refitting items.
- Check that body and door drain holes are clear after the protective wax has dried.
- Keep all equipment clean, especially wax injection nozzles.

Published: 11-May-2011

Body Repairs - Vehicle Specific Information and Tolerance Checks - Body and Frame

Description and Operation

Front End Body Dimensions

• NOTE: All dimensions shown are in millimetres (mm).

• NOTE: Dimensions shown to holes, are always taken from/to the hole centre. They are also always to the body panel surface, not to the top of bolts or components.

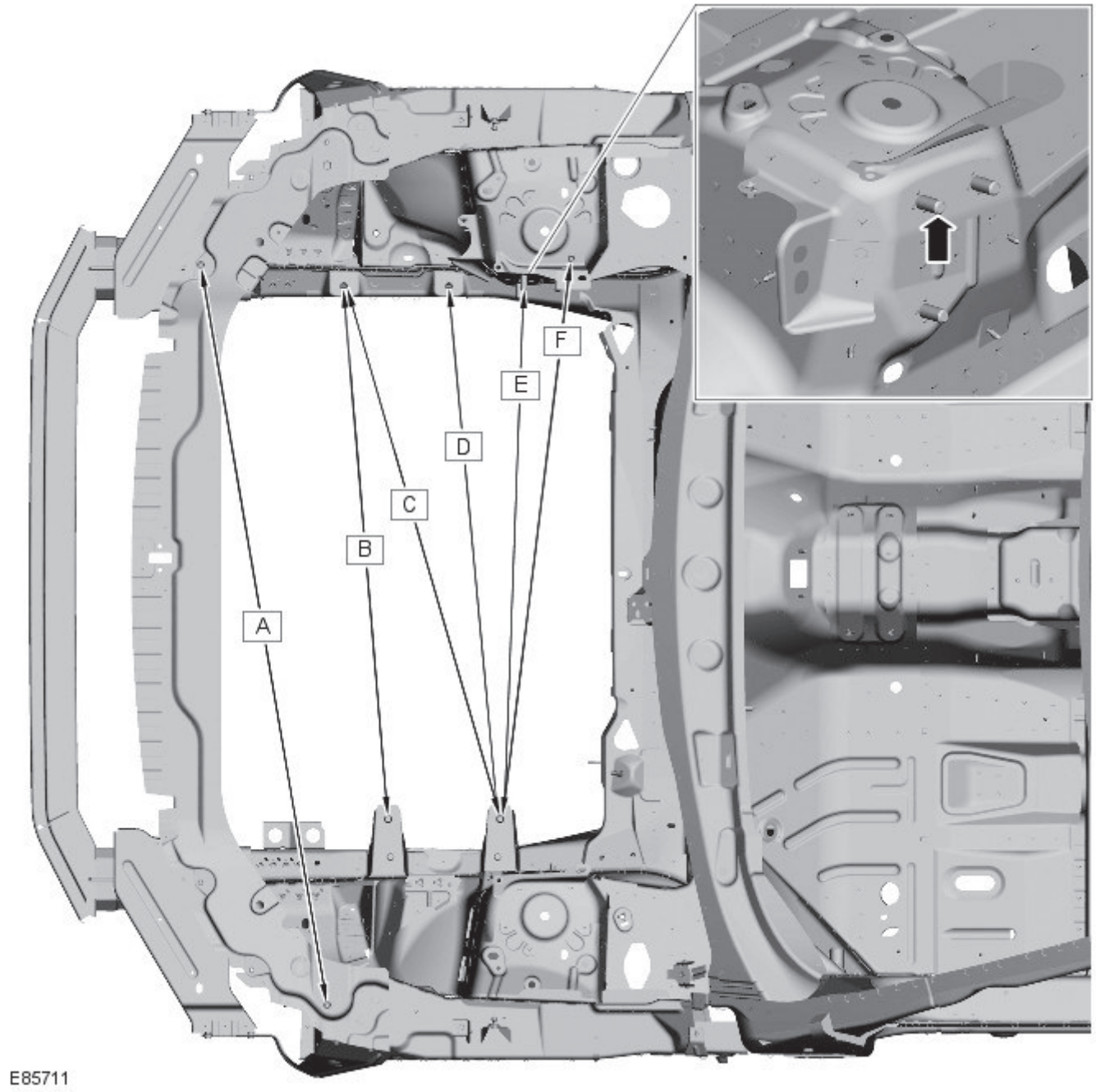

Item	From	To	Dimension
A	Head lamp inboard fixing hole	Fender, forward fixing hole	1291.3
B	Transmission LH mounting, forward stud	Engine RH mounting forward fixing hole	922
C	Transmission LH mounting, rear stud	Engine RH mounting forward fixing hole	957.5
D	Transmission LH mounting, rear stud	Engine RH mounting middle fixing hole	922.3
E	Transmission LH mounting, rear stud	Engine RH mounting forward fixing top stud	924.8
F	Transmission LH mounting, rear stud	Damper mounting, rear hole	1025.4

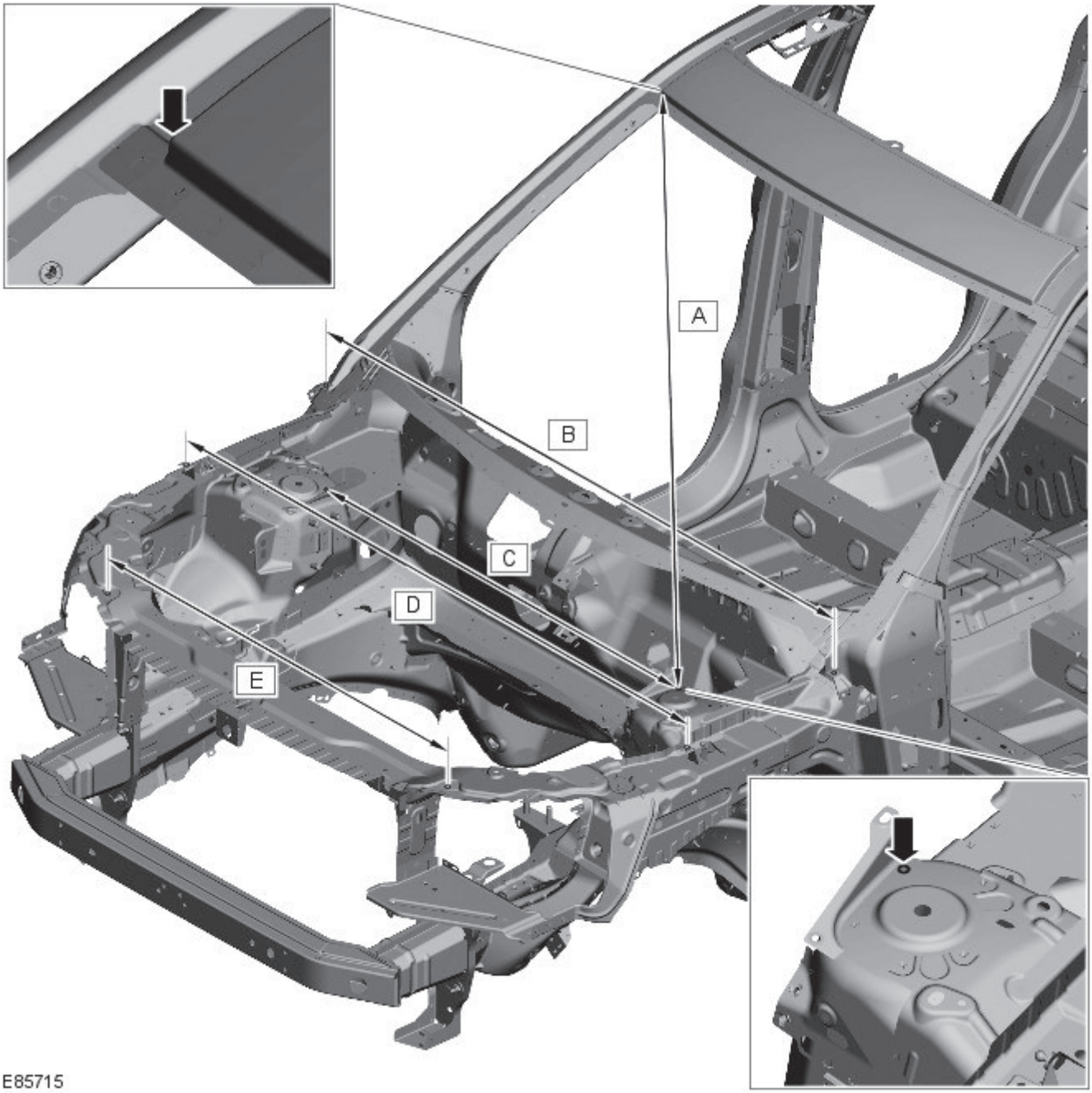

Item	From	To	Dimension
A	Damper mounting rear hole	Roof corner point	1597.25
B	RH Fender rear fixing hole	LH Fender rear fixing hole	1583.9
C	RH Damper mounting rear hole	LH Damper mounting rear hole	1136
D	RH Fender middle fixing hole	LH Fender middle fixing hole	1558.9
E	RH Headlamp top inboard fixing hole	LH Headlamp top inboard fixing hole	1061.5

E85718

Item	From	To	Dimension
A	Bumper RH top inboard fixing hole	Bumper LH top inboard fixing hole	960
B	RH Valance extension panel tooling hole	LH Valance extension panel tooling hole	1533.7

Side Panel Dimensions

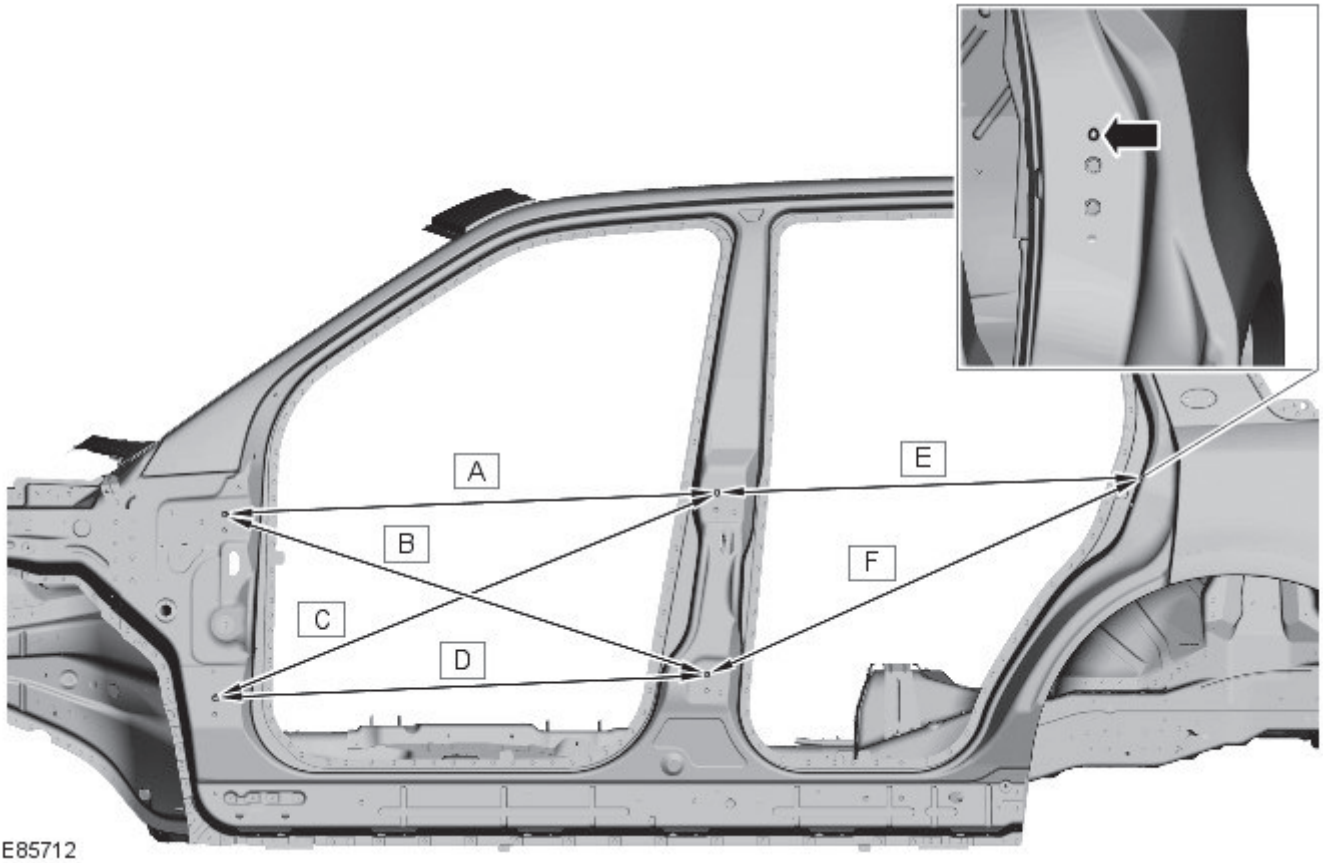

Item	From	To	Dimension
A	Front door top hinge fixing hole	Rear door top hinge fixing hole	1034.9
B	Front door top hinge fixing hole	Rear door bottom hinge, top fixing hole	1061.44
C	Front door bottom hinge, top fixing hole	Rear door top hinge fixing hole	1138.7
D	Front door bottom hinge, top fixing hole	Rear door bottom hinge, top fixing hole	1035.5
E	Rear door top hinge fixing hole	Rear door striker top fixing hole	1917.7
F	Rear door bottom hinge, top fixing hole	Rear door striker top fixing hole	983.8

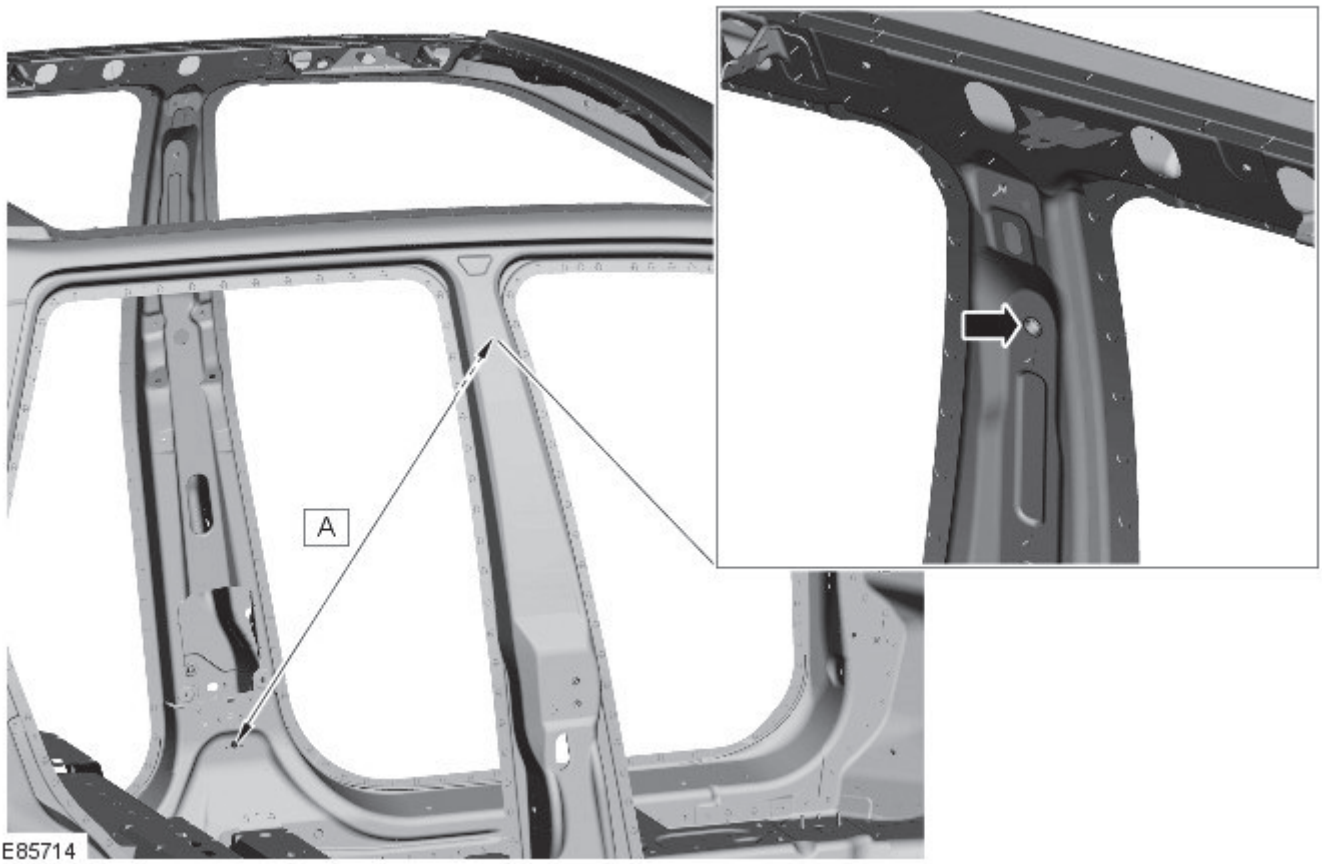

Item	From	To	Dimension

Item	From	To	Dimension
A	Front seat belt retractor fixing hole	Front seat belt anchorage fixing hole	1673.3

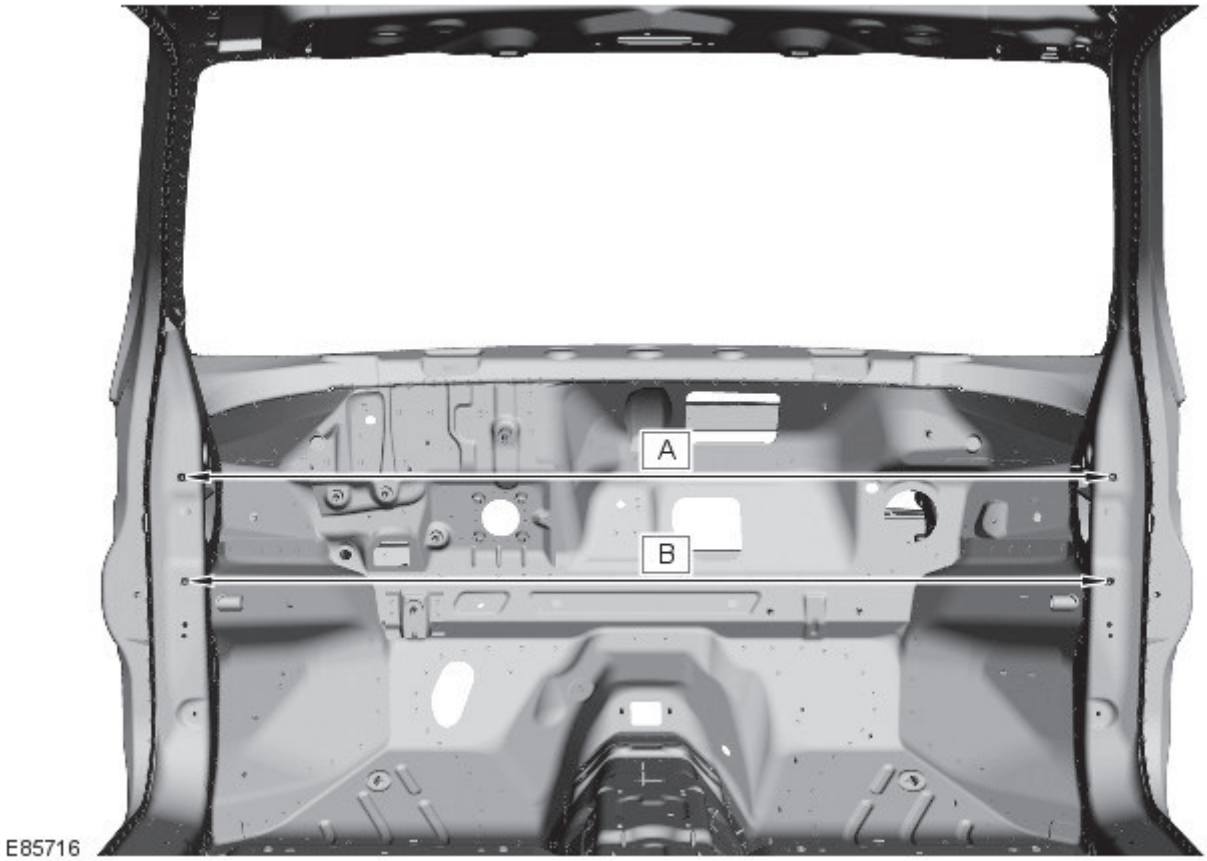

Item	From	To	Dimension
A	Instrument panel carrier RH top fixing hole	Instrument panel carrier LH top fixing hole	1447
B	Instrument panel carrier RH bottom fixing hole	Instrument panel carrier LH bottom fixing hole	1447

Rear End Body Dimensions

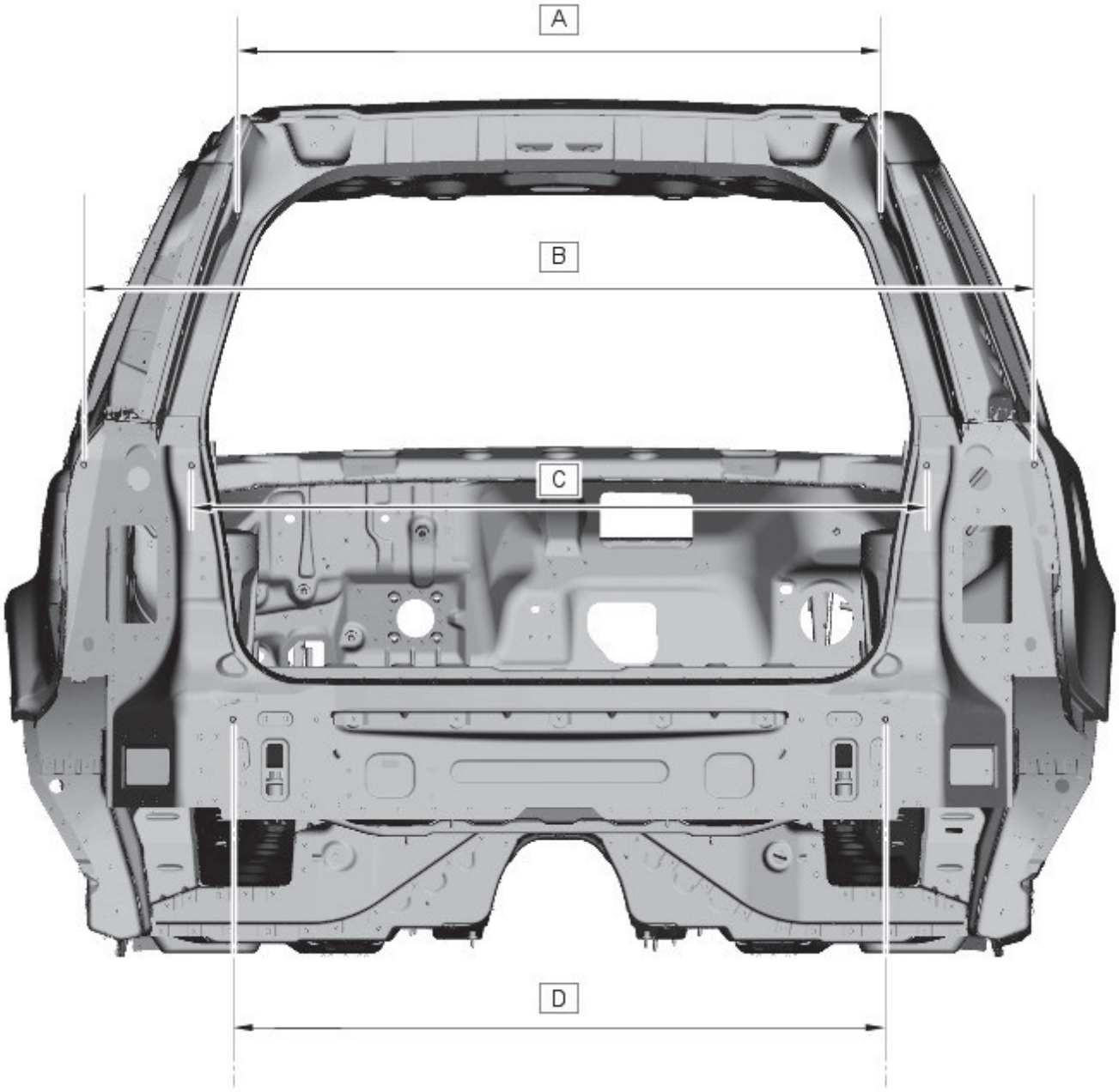

E85719

Item	From	To	Dimension
A	RH Gas strut spigot fixing hole	LH Gas strut spigot fixing hole	1086.6
B	RH Rear lamp location hole	LH Rear lamp location hole	1615.2
C	RH Rear lamp top fixing hole	LH Rear lamp top fixing hole	1241.8
D	Rear bumper RH outboard top fixing stud	Rear bumper LH outboard top fixing stud	1101.12

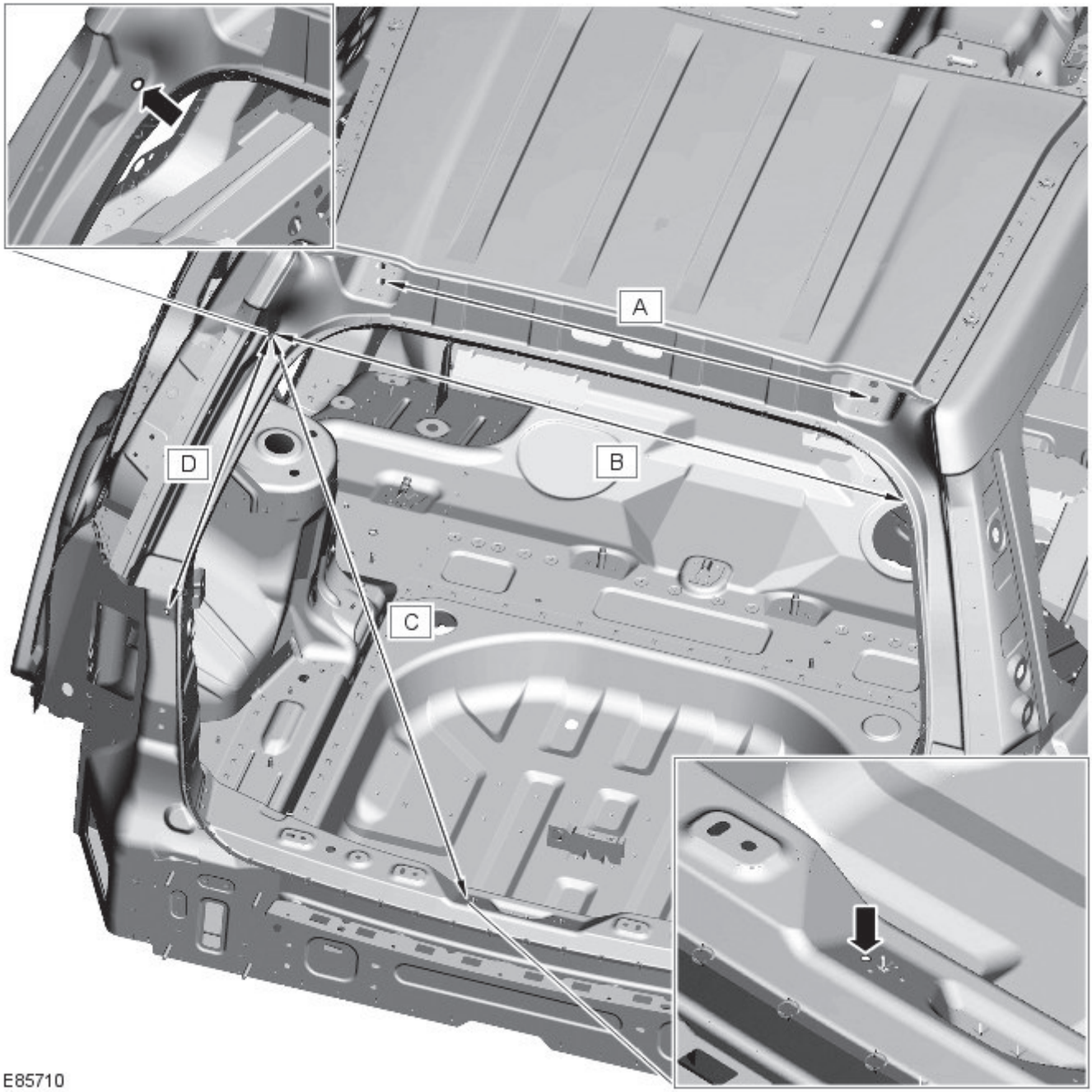

Item	From	To	Dimension
A	Liftgate LH inboard hinge fixing hole	Liftgate RH outboard hinge fixing hole	800
B	LH Gas strut spigot fixing hole	RH Gas strut spigot fixing hole	1086.6
C	LH Gas strut spigot fixing hole	Liftgate LH latch fixing hole	953
D	LH Gas strut spigot fixing hole	LH Rear lamp top fixing hole	475.9

Under Body Dimensions

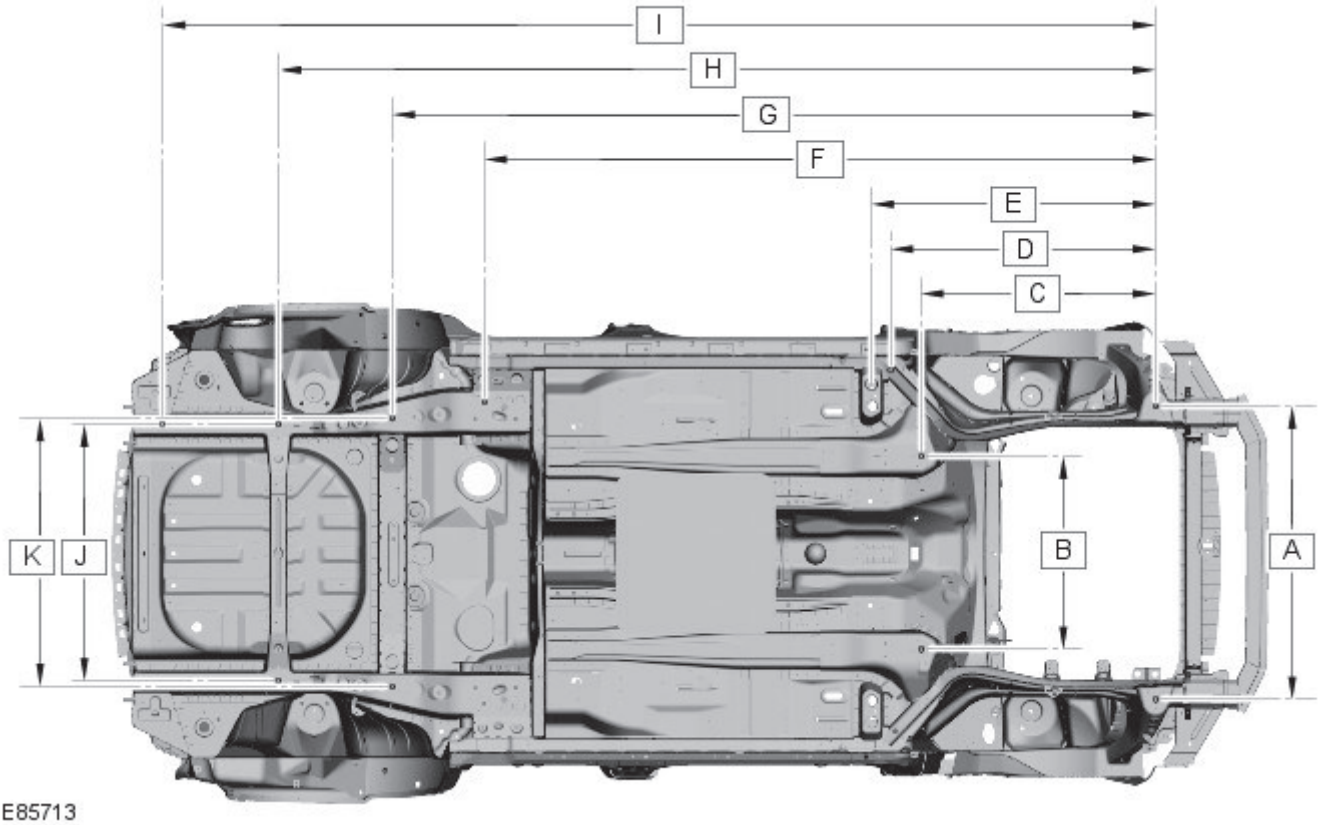

Item	From	To	Dimension
A	Front subframe RH front fixing hole	Front subframe LH front fixing hole	1096
B	Front subframe RH rear fixing hole	Front subframe LH rear fixing hole	722
C	Front subframe front fixing hole	Front subframe rear fixing hole	880
D	Front subframe front fixing hole	Side member rear extension tooling hole	976.4
E	Front subframe front fixing hole	Main floor onboard tooling hole	1065.8
F	Front subframe front fixing hole	Trailing arm fixing hole	2517.6
G	Front subframe front fixing hole	Rear subframe front fixing hole	2862
H	Front subframe front fixing hole	Rear subframe rear fixing hole	3288.7
I	Front subframe front fixing hole	Rear towing eye rear fixing hole	3720
J	Rear subframe RH rear fixing hole	Rear subframe LH rear fixing hole	959.4
K	Rear subframe RH front fixing hole	Rear subframe LH front fixing hole	1000

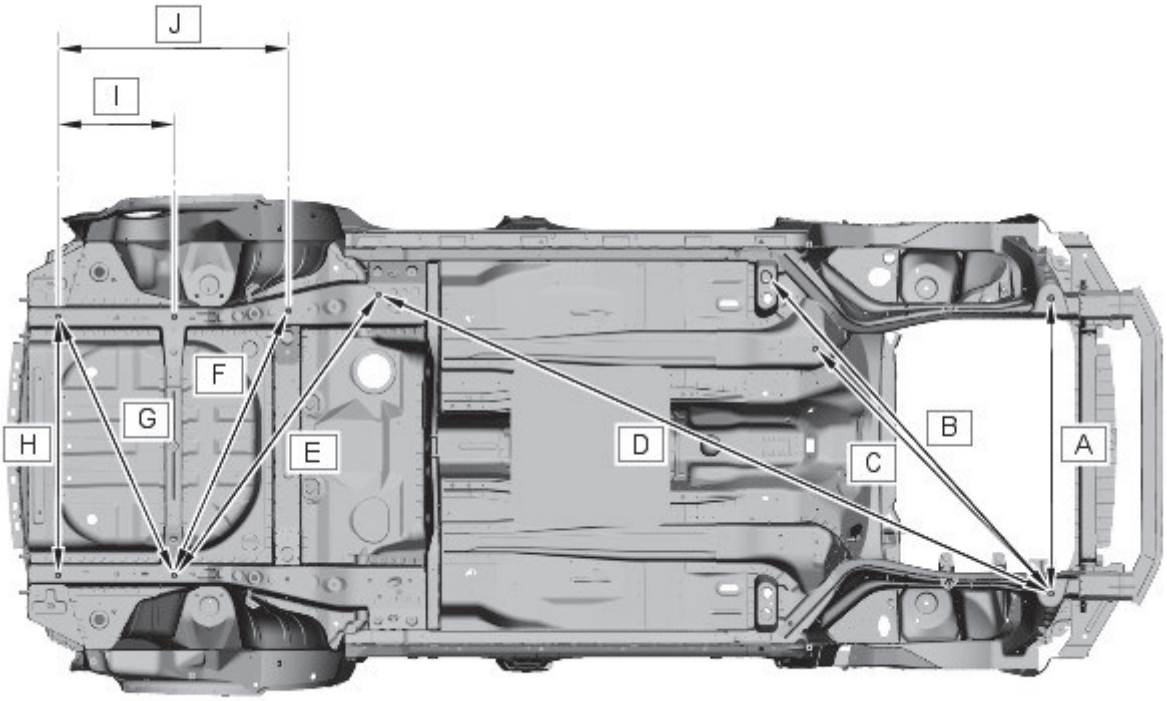

E85717

Item	From	To	Dimension
A	Front subframe RH front fixing hole	Front subframe LH front fixing hole	1096
B	Front subframe front fixing hole	Main floor onboard tooling hole	1606.2
C	Front subframe front fixing hole	Front subframe rear fixing hole	1287.6
D	Front subframe front fixing hole	Trailing arm fixing hole	2754.4
E	Rear subframe rear fixing hole	Trailing arm fixing hole	1302.2
F	Rear subframe rear fixing hole	Rear subframe front fixing hole	1071.2
G	Rear subframe rear fixing hole	Rear towing eye rear fixing hole	1051.9
H	Rear towing eye rear fixing hole	Rear towing eye rear fixing hole	959.4
I	Rear subframe rear fixing hole	Rear towing eye rear fixing hole	431.3
J	Rear subframe front fixing hole	Rear towing eye rear fixing hole	858

Gap and Profile measurements

The following information is to be used as a guide to assist the technician in installing exterior body panels and trim items so as to achieve a correctly aligned and cosmetically acceptable vehicle.

• NOTE: All dimensions shown are in millimetres (mm).

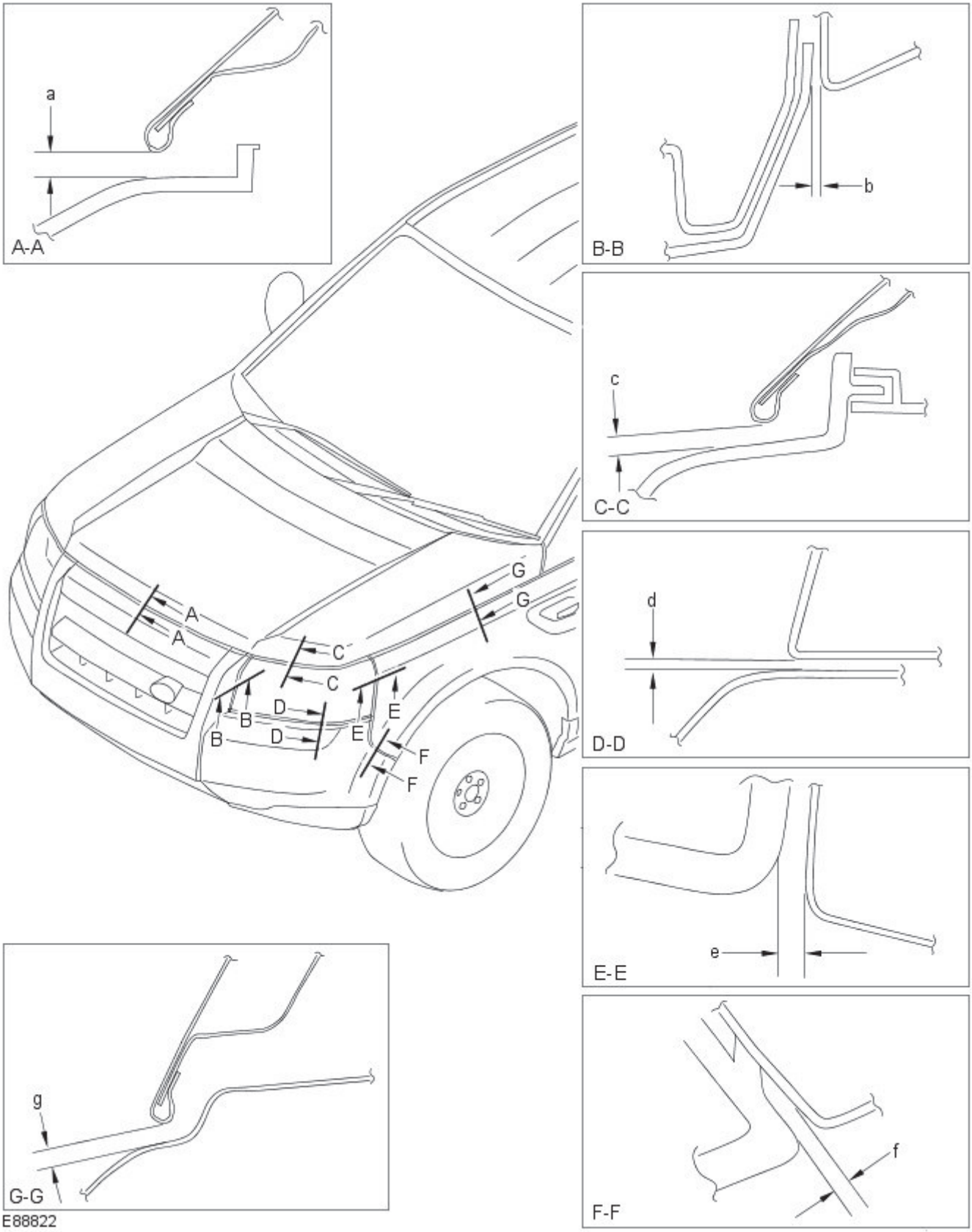

Section	Description	Gap	Profile
A-A	Hood to bumper cover gap	5.0 +2.0 -0.0	N/A
B-B	Front bumper cover to headlamp gap	5.0 ±2.5 (maximum taper 2.0)	N/A
C-C	Hood to headlamp gap	5.0 +2.0 -0.0	N/A
D-D	Headlamp to bumper cover	4.0 ±2.0	N/A
E-E	Fender to headlamp	3.0 ±1.0	1.0 ±1.5
F-F	Fender to bumper cover	2.0 +1.0 -0.0	1.5 ±1.0
G-G		5.0 ±1.7	N/A

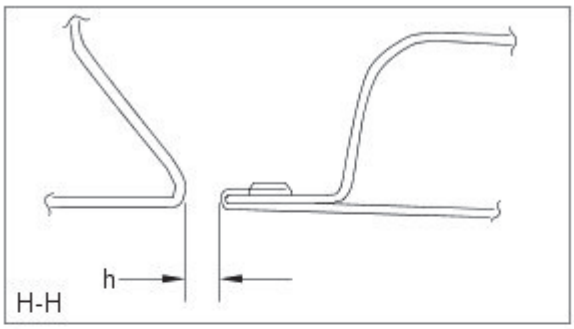

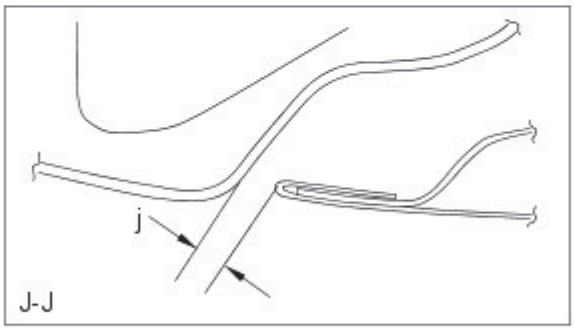

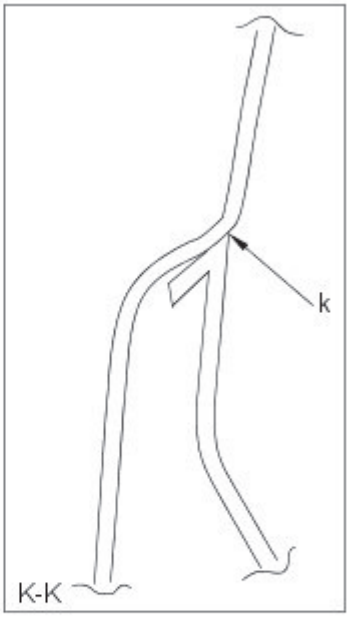

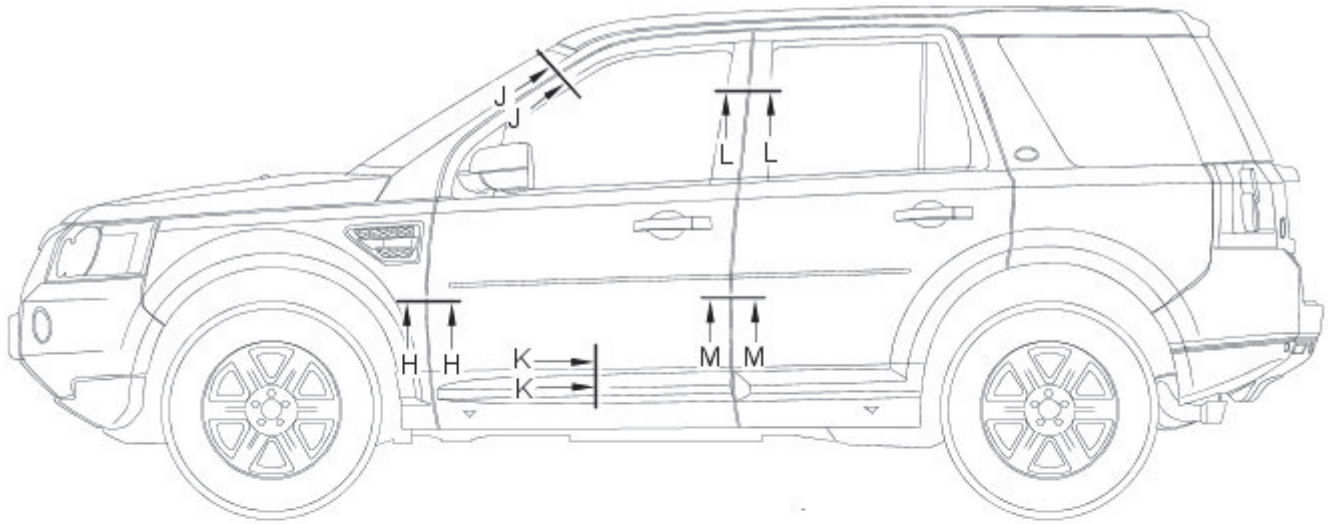

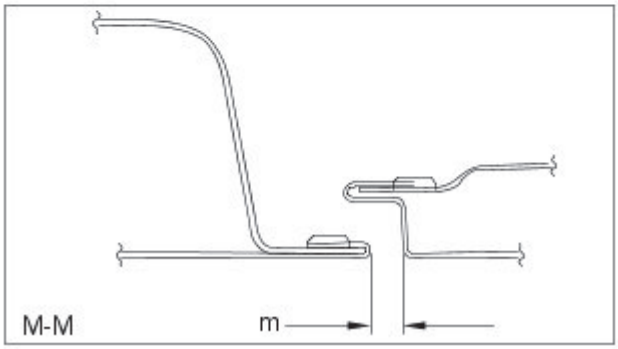

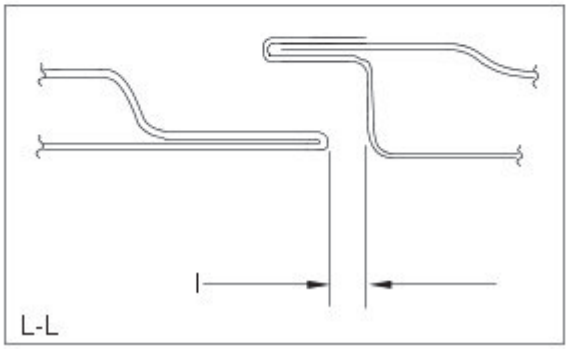

E88823

Section	Description	Gap	Profile
H-H	Fender to front door	5.0 ±1.0	0.7 ±1.0
J-J	Front door to A-Pillar	4.5 ±1.0	-2.5 ±1.2
K-K	Front door finisher to door	0.0 +1.0 -0.0	-2.0 ±1.0
L-L	Front door to rear door	5.0 ±1.0	0.8 ±1.0
M-M	Front door to rear door	5.0 ±1.0	1.0 ±1.0

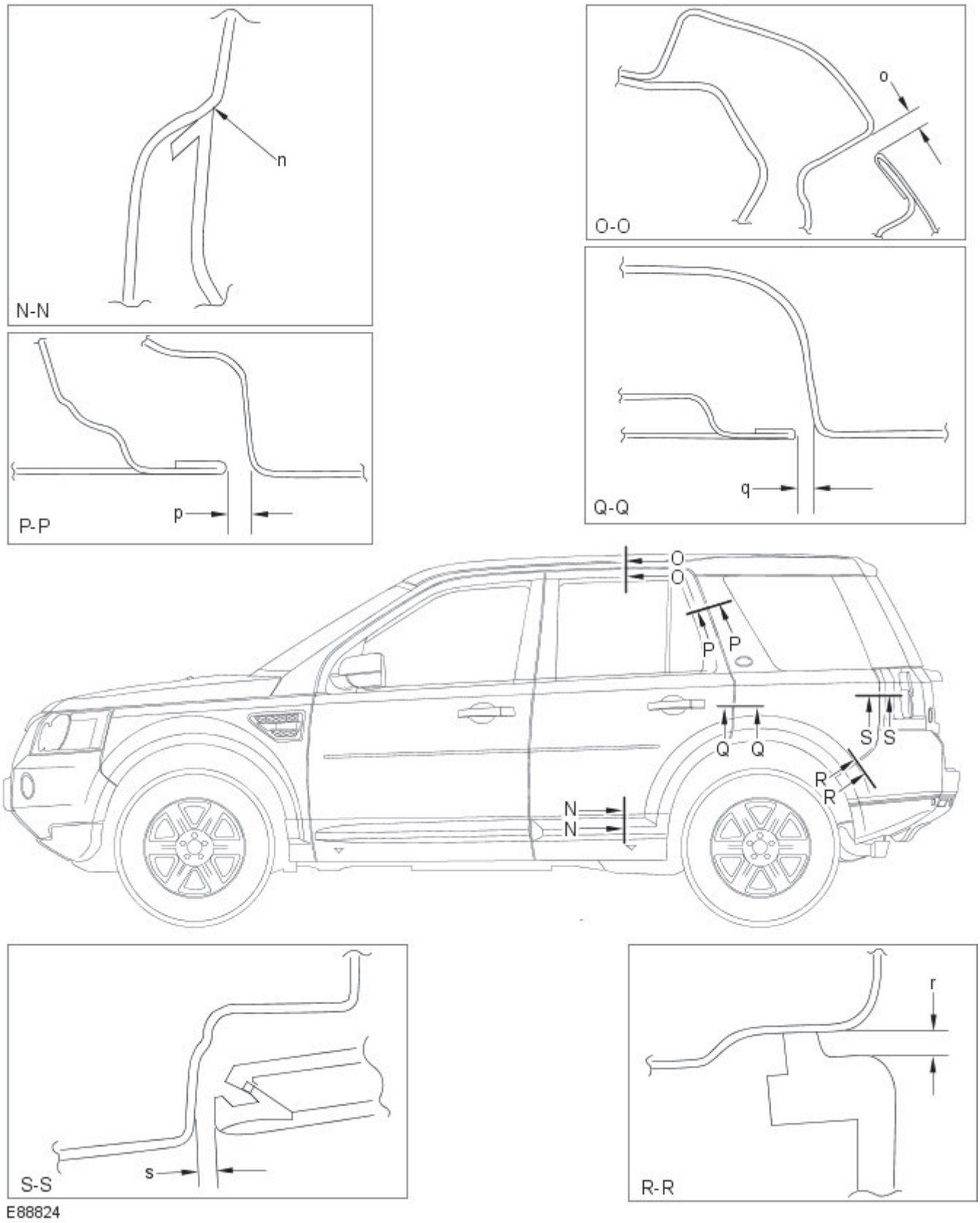

Section	Description	Gap	Profile
N-N	Rear door finisher to door	0.0 +1.0 -0.0	-2.0 ±1.0
O-O	Rear door to side panel	4.5 ±1.0	-2.5 ±1.2
P-P	Rear door to side panel	4.5 ±1.0	1.0 ±1.0
Q-Q	Rear door to side panel	5.0 ±1.0	0.5 ±0.5
R-R	Side panel to bumper cover	2.0 +1.0 -0.0	1.5 ±1.0
S-S	Side panel to rear lamp	3.0 ±1.5	1.0 ±1.2

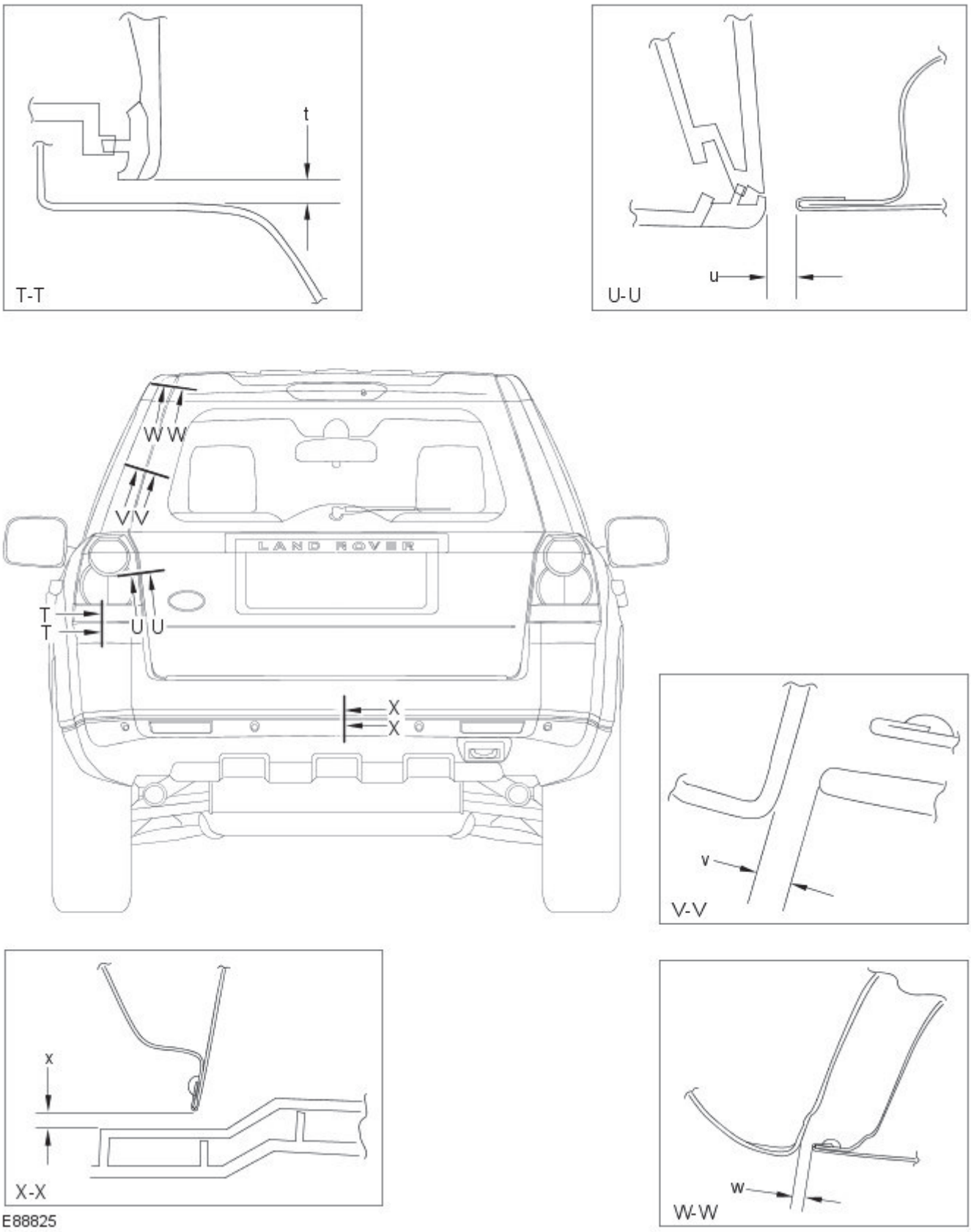

Section	Description	Gap	Profile
T-T	Rear lamp to bumper cover	3.0 ±2.0	N/A
U-U	Rear lamp to liftgate	5.0 ±1.5	3.0 ±1.3
V-V	D-Pillar trim panel to liftgate glass	5.0 ±2.0	2.5 ±1.3
W-W	Side panel to liftgate	5.0 ±1.5	2.0 ±1.5
X-X	Liftgate to bumper cover	6.0 ±2.7	N/A

Published: 11-May-2011

Front End Sheet Metal Repairs - Front End Sheet Metal

Description and Operation

Front end service panels

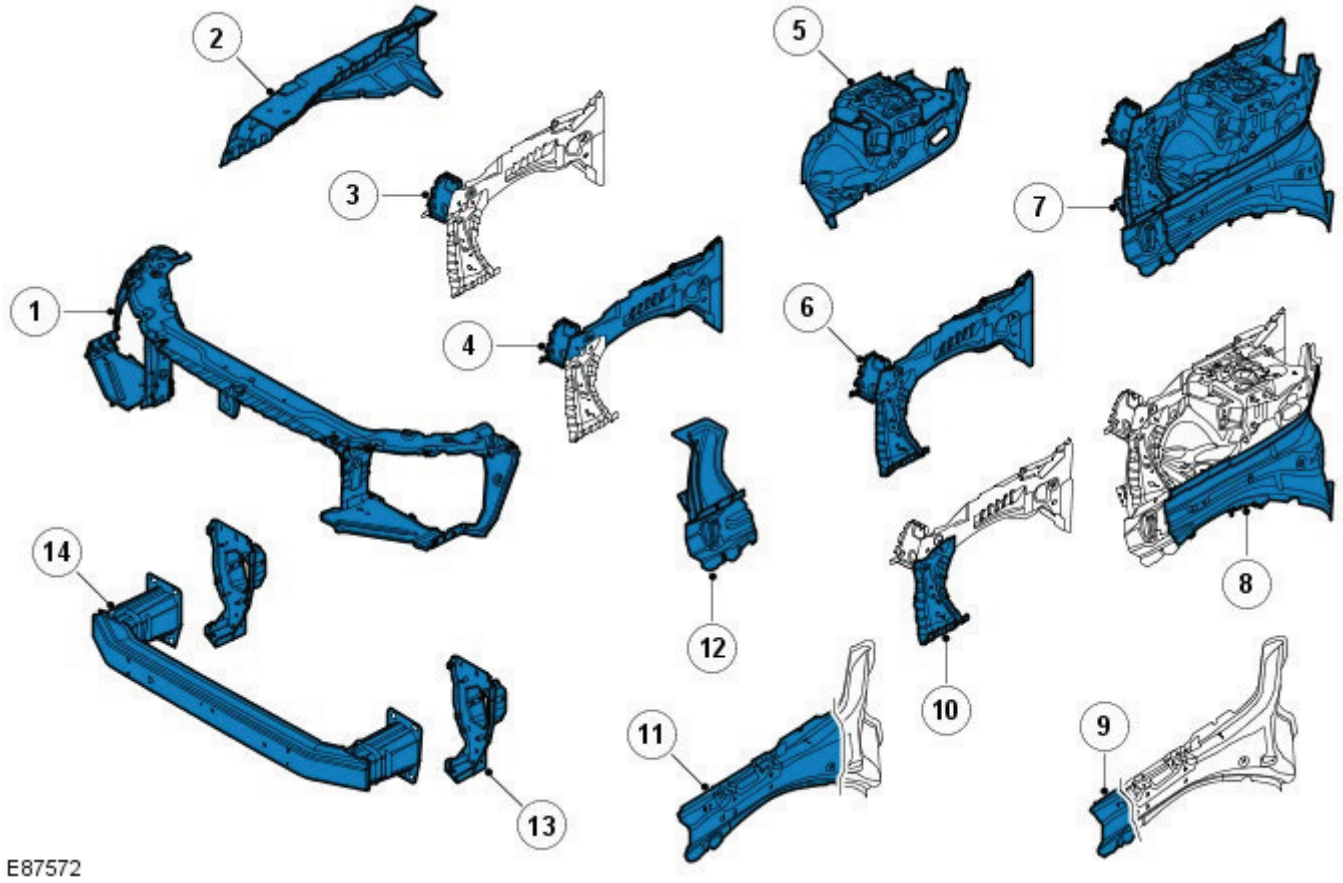

Item	Description
1	Hood latch panel
2	Fender apron upper panel
3	Fender apron panel front extension
4	Fender apron panel reinforcement
5	Suspension top mount
6	Fender apron panel
7	Front side member and suspension top mount assembly
8	Front side member closing panel
9	Front side member section
10	Fender apron lower panel
11	Front side member
12	Fender apron panel front reinforcement
13	Front bumper mounting
14	Front bumper

Time schedules, front end

The following schedules show the total time taken to replace single panels and also combinations of panels. The published times include the removal of Mechanical, Electrical and Trim, (MET), items, plus paint times based on Metallic Clear Over Base Paint, (blends to adjacent panels are not included). A corrosion protection time is included where appropriate.

The times were generated by Thatcham, (the Motor Insurance Repair Research Centre), and are to be used as a guide only, based on new undamaged panels. Job allowances are not included, as a guide Thatcham recommend 0.3 hours to be added to single panel times and 0.5 hours to be added to combination times.

Single panel times

Panel Description	Times
Hood	**5.6**
Front bumper cover	**5.5**
Front fender	**5.5**
Hood latch panel	**6.2**
Engine and Suspension assembly remove and install	**8.5**
Instrument panel remove and install	**6.2**

Combination panel replacement times

Combination panel times

Panel Description	Times
Hood	
Front bumper cover	
Front bumper	
Hood latch panel	
Front fender	
Fender mounting bracket, (front)	
Total Time	**L/H 16.5** **R/H 16.5**

Combination panel times

Panel Description	Times
Hood	
Front bumper cover	
Front bumper	
Hood latch panel	
Front fender L/H and R/H	
Front fender mounting bracket, (front) L/H and R/H	
Total Time	**17.2**

Combination panel times

Panel Description	Times
Hood	
Front bumper cover	
Front bumper	
Hood latch panel	
Front fender	
Front fender mounting bracket, (front)	
Front bumper mounting	
Front side member	
Front side member and suspension top mount assembly	
Fender apron upper panel	
Engine and suspension assembly remove and install	
Instrument panel remove and install	
Total Time	**L/H 42.2** **R/H 43.6**

Combination panel times

Panel Description	Times
Hood	
Front bumper cover	
Front bumper	
Hood latch panel	
Front fender L/H and R/H	
Front fender mounting bracket, (front) L/H and R/H	
Front bumper mounting L/H and R/H	
Front side member L/H and R/H	
Front side member and suspension top mount assembly L/H and R/H	
Fender apron upper panel L/H and R/H	
Engine and suspension assembly remove and install	
Instrument panel remove and install	
Total Time	**57.6**

Combination panel times

Panel Description	Times
Hood	
Front bumper cover	
Front bumper	
Hood latch panel	
Front fender	
Front fender mounting bracket, (front)	
Front bumper mounting	
Front side member section	
Fender apron lower panel	
Fender apron panel front reinforcement	
Engine and suspension assembly remove and install	
Total Time	**L/H 29.9** **R/H 30.0**

Published: 11-May-2011

Front End Sheet Metal Repairs - Front Bumper Mounting

Removal and Installation

Removal

• NOTE: The front bumper mounting is serviced as a separate weld-on panel.

• NOTE: Due to the combined thickness of the panels, it is recommended that spot welds are replaced with MIG plug welds in this repair.

1. The front bumper mounting is replaced in conjunction with:

- Front bumper cover
- Front bumper
- Hood latch panel
- Both front fenders

2. For additional information relating to this repair procedure please see the following:
For additional information, refer to: Body and Frame (501-26 Body Repairs - Vehicle Specific Information and Tolerance Checks, Description and Operation) / Standard Workshop Practices (100-00 General Information, Description and Operation).

3. Remove the hood latch panel.
For additional information, refer to: Hood Latch Panel (501-27, Removal and Installation).

4. Remove the radiator cooling pack.
For additional information, refer to: Radiator (303-03A Engine Cooling - I6 3.2L Petrol, Removal and Installation).

5. LH Side: Remove the air intake pipe.

6. RH Side: Remove the windshield washer reservoir.
For additional information, refer to: Windshield Washer Reservoir (501-16 Wipers and Washers, Removal and Installation).

7. Release and lay aside the wiring harness.

8. Mill out the spot welds.

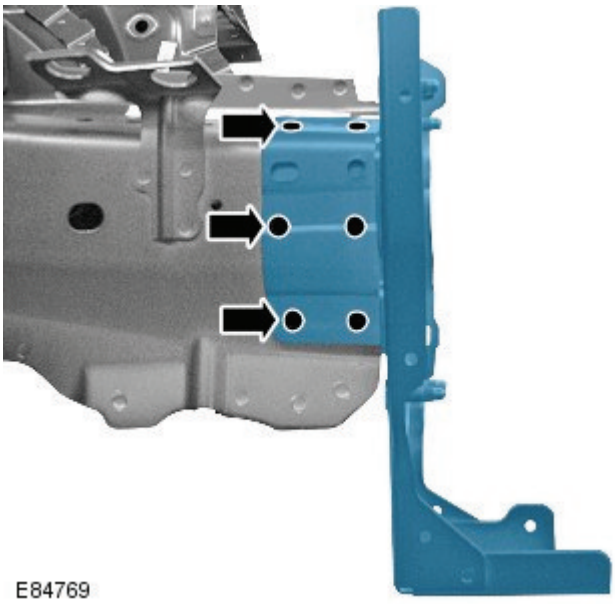

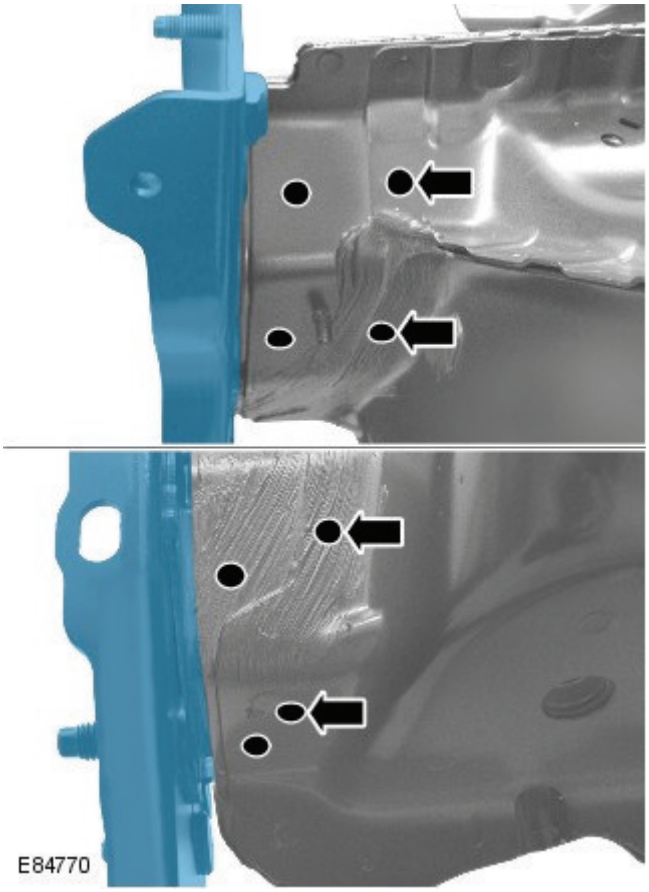

9. Mill out the spot welds.

10. Separate the joints and remove the panel.

Installation

1. Prepare the old and new panel joint surfaces.

2. Drill holes in the new panel ready for plug welding.

3. Offer up the new panel and clamp into position. Check alignment, if correct, proceed to next step, if not, rectify and recheck before proceeding.

4. Plug weld to the front side member.

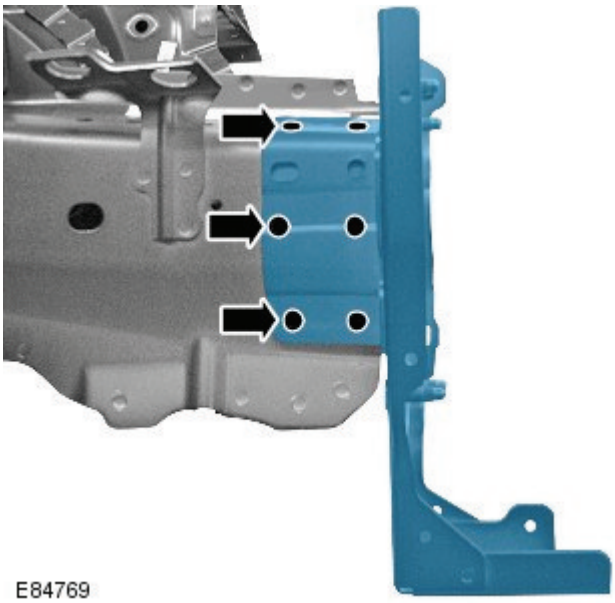

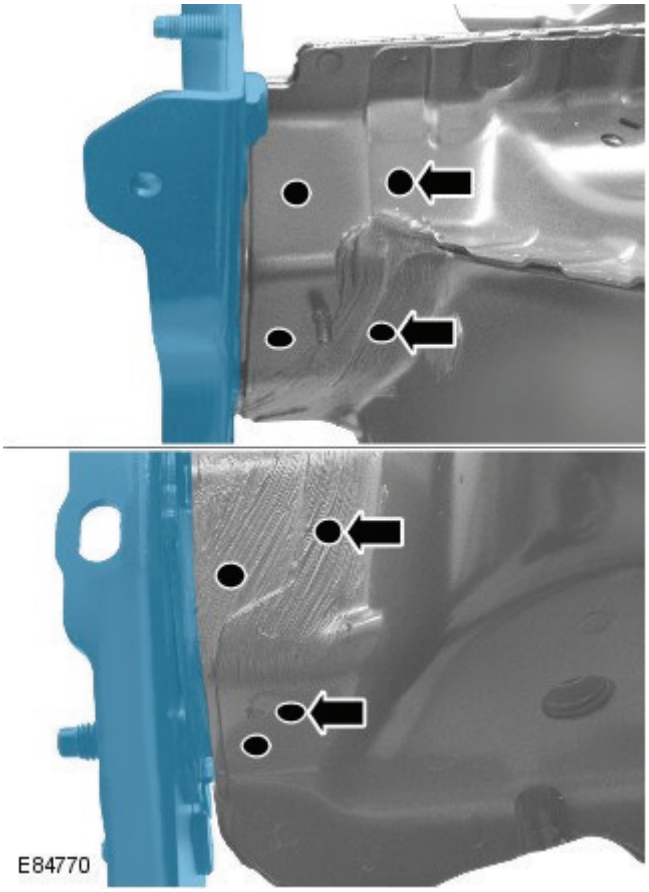

5. Plug weld to the front side member closing panel.

6. Dress all welded joints.

7. The installation of associated panels and mechanical components is the reverse of removal.

Published: 11-May-2011

Front End Sheet Metal Repairs - Front Side Member and Suspension Top Mount Assembly

Removal and Installation

Removal

• NOTE: The front side member and suspension top mount assembly is an assembly of the front side member closing panel, fender apron panel reinforcement, fender apron panel front extension, fender apron lower panel, front side member and fender apron panel and the suspension top mount.

• NOTE: The service panel is not fully welded.

• NOTE: The panel is serviced less its weld studs

1. The front side member and suspension top mount assembly is replaced in conjunction with:

- Front bumper cover
- Front bumper armature
- Hood latch panel
- Both front fenders
- Front bumper mounting
- Fender apron upper panel
- Front side member

2. For additional information relating to this repair procedure please see the following:
For additional information, refer to: Body and Frame (501-26 Body Repairs - Vehicle Specific Information and Tolerance Checks, Description and Operation) /
Standard Workshop Practices (100-00 General Information, Description and Operation).

3. Remove the front side member.
For additional information, refer to: Front Side Member (501-27 Front End Sheet Metal Repairs, Removal and Installation).

4. Remove the fender apron upper panel.
For additional information, refer to: Fender Apron Upper Panel (501-27 Front End Sheet Metal Repairs, Removal and Installation).

5. Remove the instrument panel.
For additional information, refer to: Instrument Panel - TD4 2.2L Diesel (501-12 Instrument Panel and Console, Removal and Installation).

6. Remove the rocker panel inner trim.

7. Remove the B-pillar lower trim.
For additional information, refer to: B-Pillar Lower Trim Panel (501-05 Interior Trim and Ornamentation, Removal and Installation).

8. Release and lay aside the front carpet section.

9. Release and lay aside the insulating material at the outer bulkhead.

10. LH Side: Remove the hood release handle.

11. RH Side: Remove the brake booster.
For additional information, refer to: Brake Booster (206-07 Power Brake Actuation, Removal and Installation).

12. RH Side: Remove the pedal box.

13. Release and lay aside the wiring harnesses at the a-pillar, bulkhead and side member.

14. Mill out the spot welds.

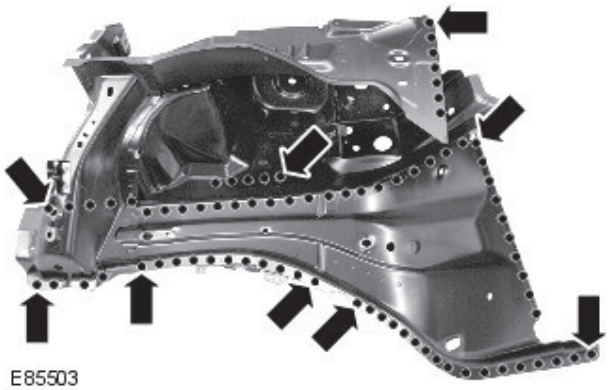

E85503

15. Separate the joints and remove the old panel.

Installation

1. Prepare the new panel in the areas where it is not fully welded and MIG plug weld these areas.

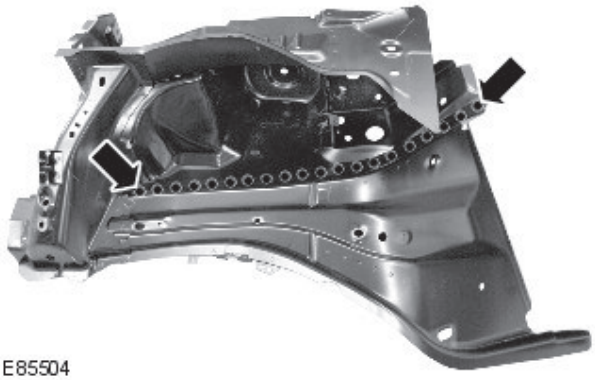

E85504

2. Prepare the old and new panel joint surfaces.

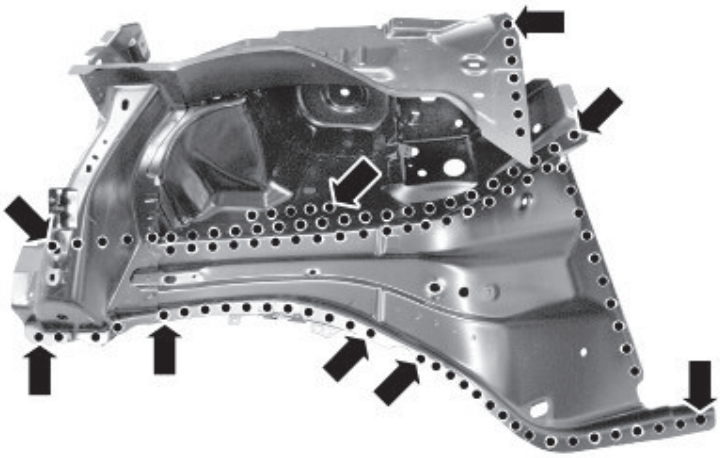

E85505

3. Drill holes in the new panel ready for MIG plug welding

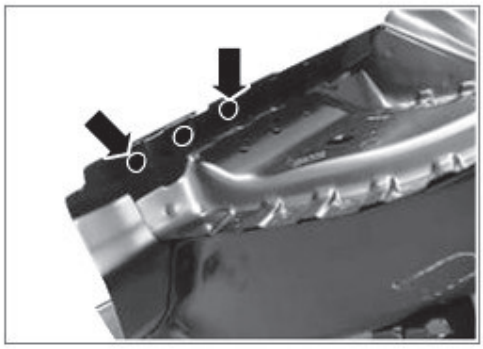

4. Offer up the new panel and clamp into position. Check alignment, if correct, proceed to next step, if not, rectify and recheck before proceeding.

5. MIG Plug weld.

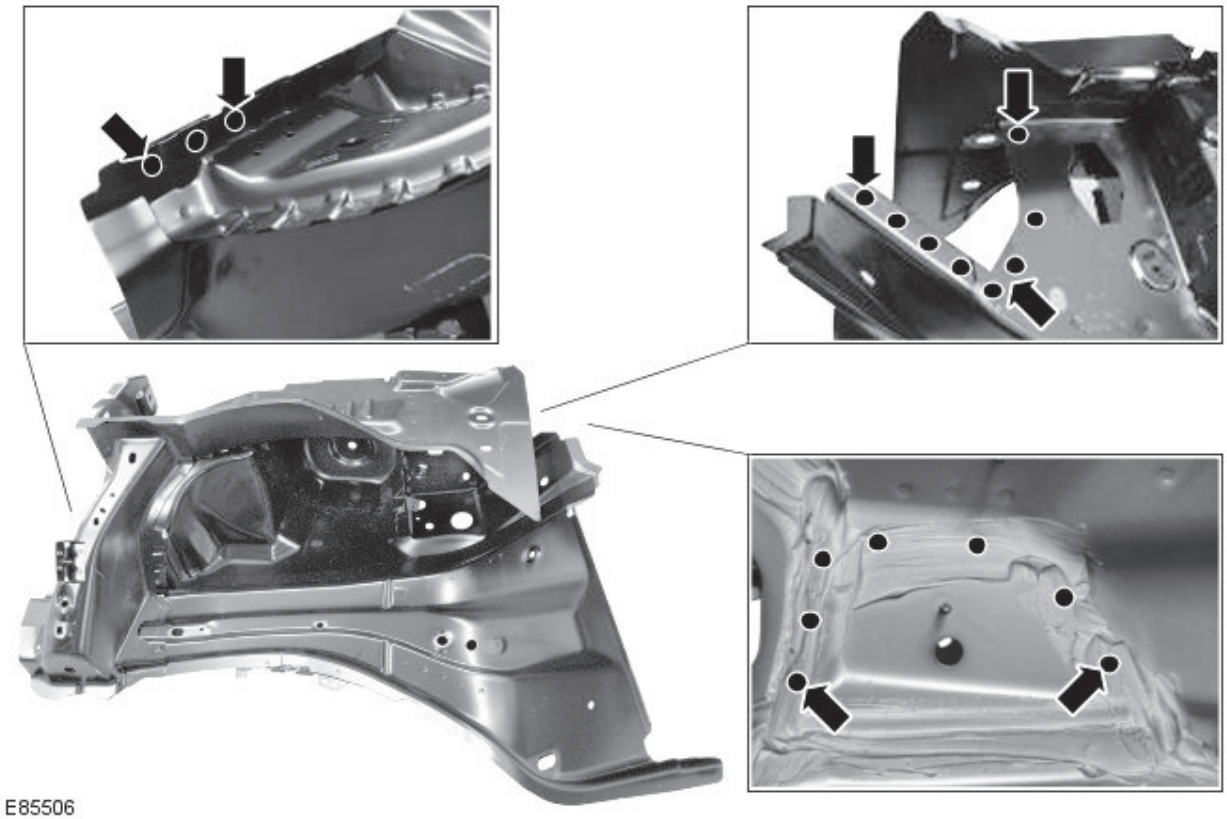

E85506

6. MIG Plug weld.

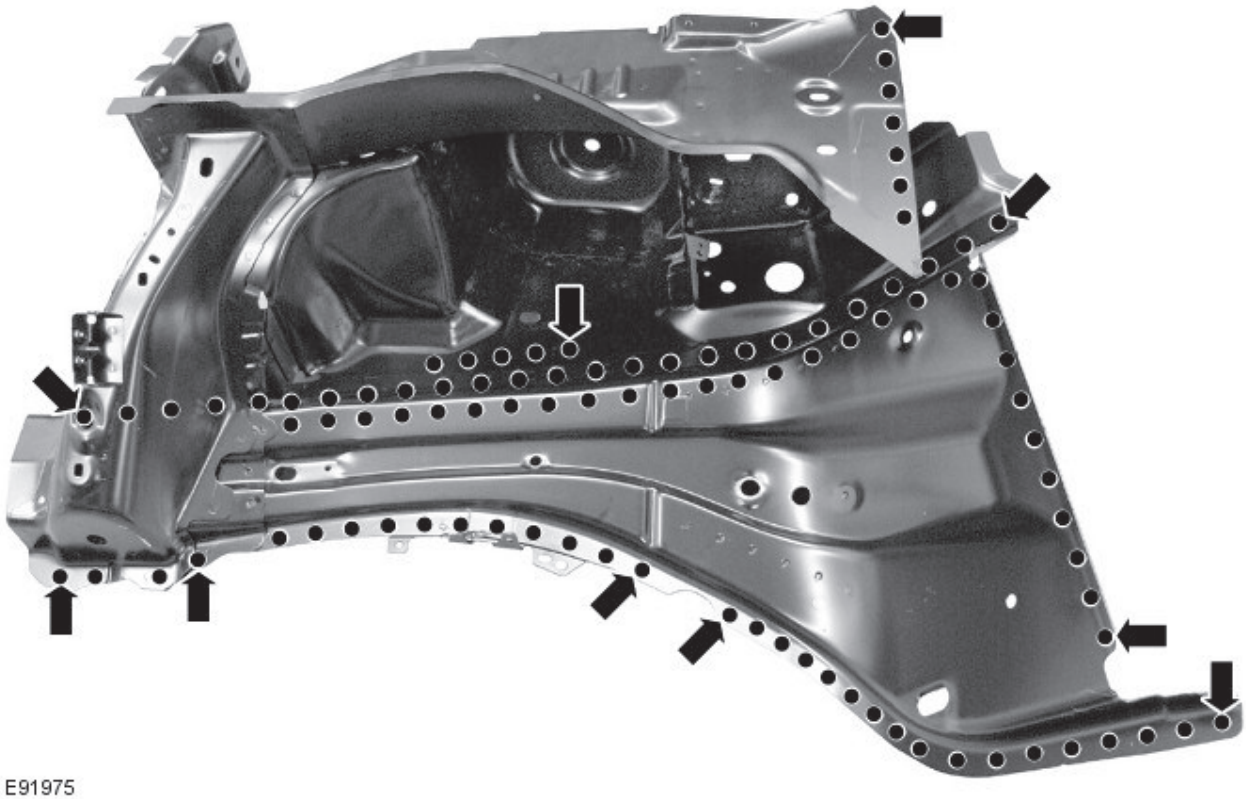

E91975

7. Install weld studs.

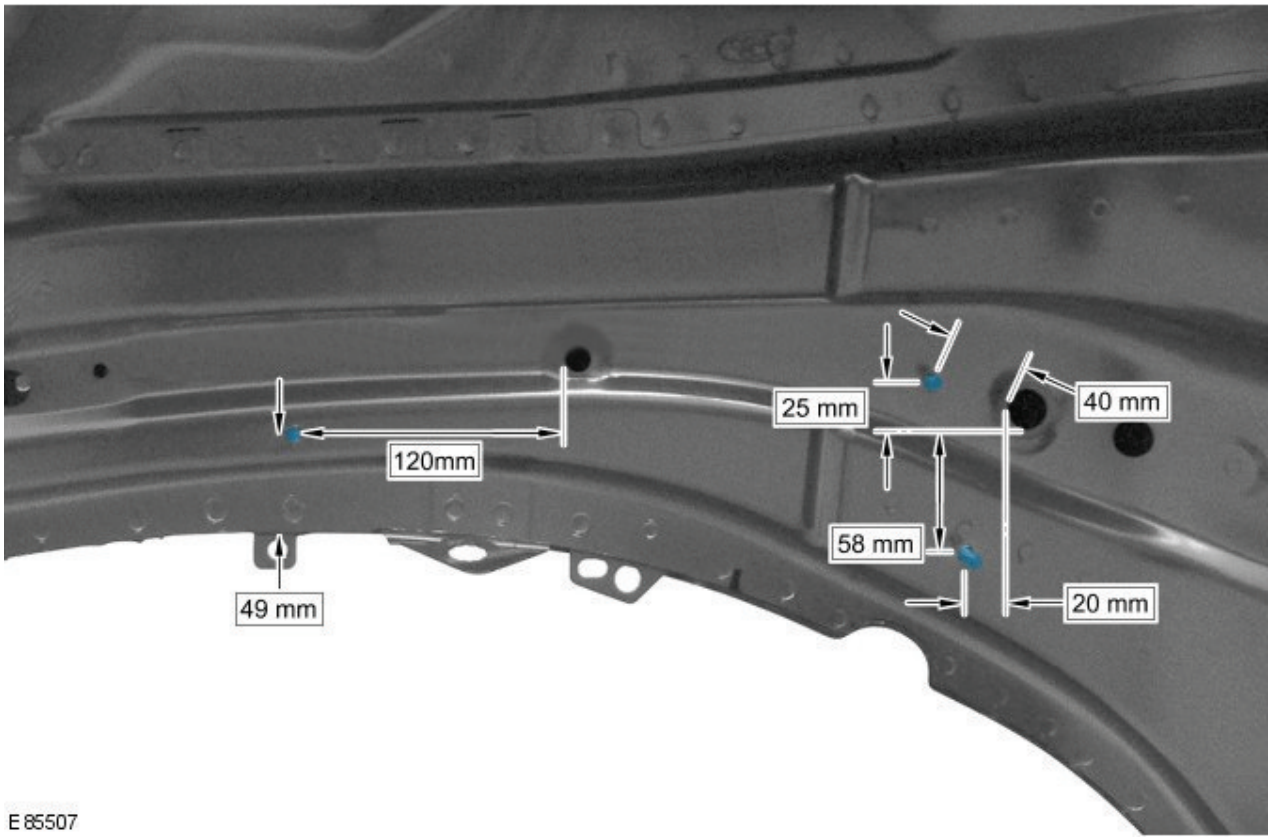

E85507

8. Install weld studs.

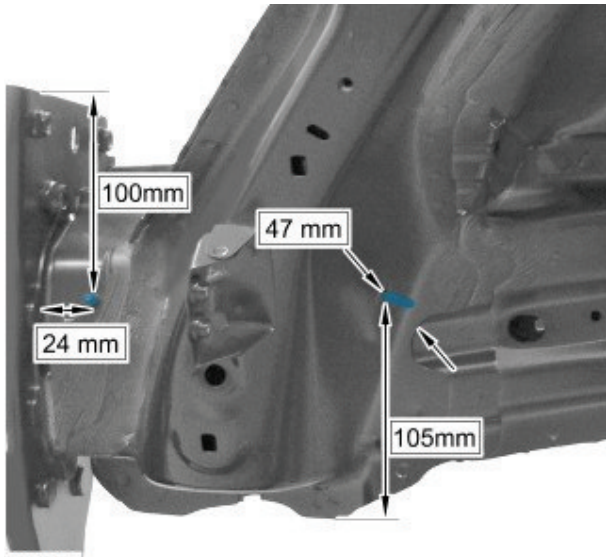

E91976

9. Dress all welded joints.

10. The installation of associated panels and mechanical components is the reverse of removal.

Published: 11-May-2011

Front End Sheet Metal Repairs - Front Side Member

Removal and Installation

• NOTE: The front side member is serviced as a separate weld on panel. This procedure is to fit a long section cut from the service panel, discarding the rear part.

• NOTE: The service panel is not fully welded.

• NOTE: The section must be made at least 20mm forward of the laser weld.

1. The front side member is replaced in conjunction with:

- Front bumper cover
- Front bumper
- Hood latch panel
- Both front fenders
- Front bumper mounting
- Front side member closing panel
- Fender apron panel front reinforcement
- Fender apron lower panel

• NOTE: It is also necessary to remove the engine and suspension as an assembly.

2. For additional information relating to this repair procedure please see the following:
For additional information, refer to: Body and Frame (501-26 Body Repairs - Vehicle Specific Information and Tolerance Checks, Description and Operation) / Standard Workshop Practices (100-00 General Information, Description and Operation).

3. Remove the front side member closing panel.
For additional information, refer to: Front Side Member Closing Panel (501-27 Front End Sheet Metal Repairs, Removal and Installation).

4. Remove the radiator cooling pack.
For additional information, refer to: Radiator (303-03A Engine Cooling - I6 3.2L Petrol, Removal and Installation).

5. Remove the engine and front suspension as an assembly.

6. Release and lay aside the brake pipe.

7. LH Side: Release the battery junction box and position aside.

8. LH Side: Remove the air intake pipe.

9. LH Side: Release and lay aside the brake pipe at the side member.

10. LH Side: Remove the anti-Lock brake system (ABS) Module.
For additional information, refer to: Anti-Lock Brake System (ABS) Module (206-09A Anti-Lock Control, Removal and Installation).

11. RH Side: Remove the windshield washer reservoir.
For additional information, refer to: Windshield Washer Reservoir (501-16 Wipers and Washers, Removal and Installation).

12. RH Side: Remove the engine mounting bracket.
For additional information, refer to: Engine Mount RH (303-01B Engine - TD4 2.2L Diesel, Removal and Installation).

13. RH Side: Remove the fender apron brake pipes.

14. RH Side: Remove the fender apron A/C pipe.

15. Release and lay aside the insulating material at the bulkhead.

16. Release and lay aside the wiring harness.

17. Mill out the spot welds.

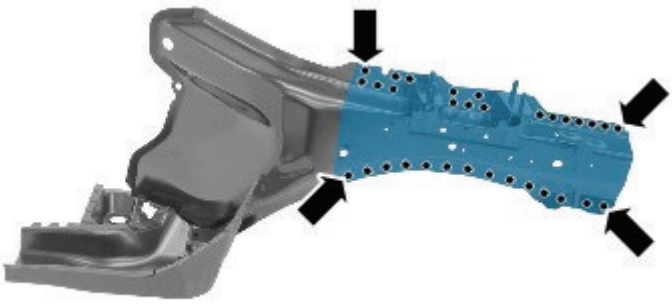

E84785

18. Saw cut the old panel at the point illustrated. The cut should be made at least 20mm forward of the laser weld.

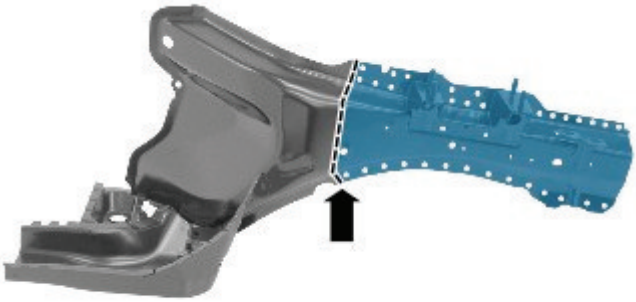

E84786

19. Separate the joints and remove the old panel.

Installation

1. Saw cut the new section from the service panel.

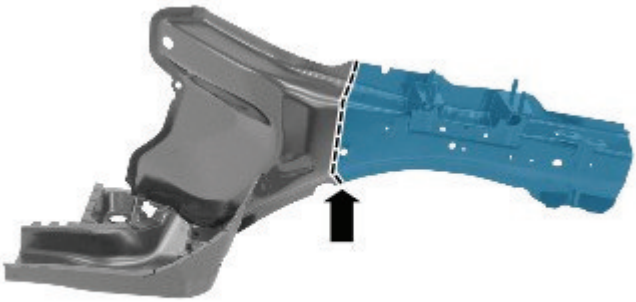

E84787

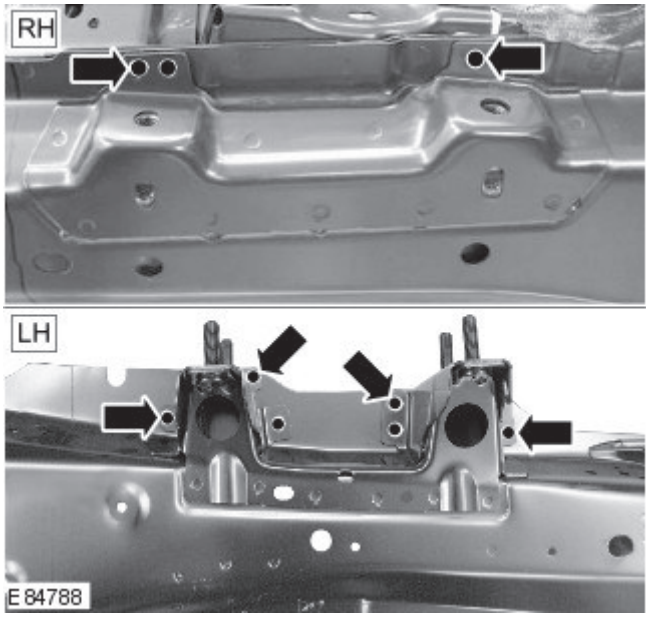

2. Prepare and MIG plug weld the new panel in the areas illustrated, where it is not fully welded.

3. Prepare the old and new panel joint surfaces.

4. Drill holes in the new panel ready for MIG plug welding.

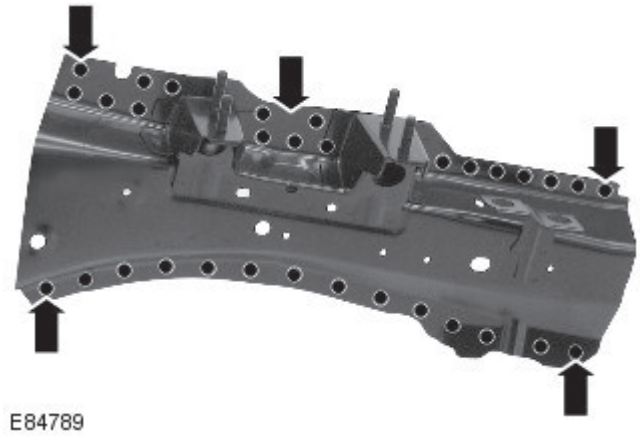

5. Offer up the new panel and clamp into position. Check alignment, if correct, proceed to next step, if not, rectify and recheck before proceeding.

6. With panels clamped into position:

1. Tack weld the butt joint.
2. MIG plug weld.

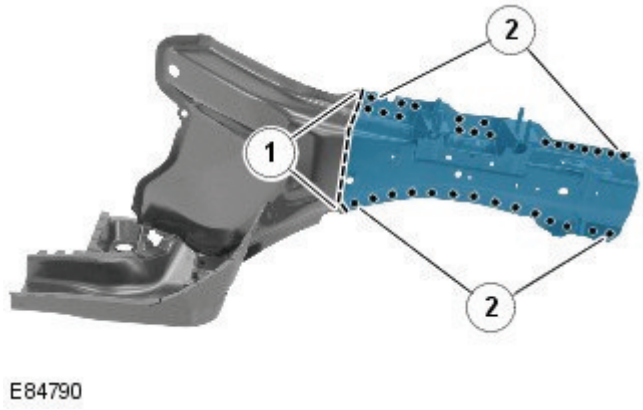

7. Dress the tack welds.

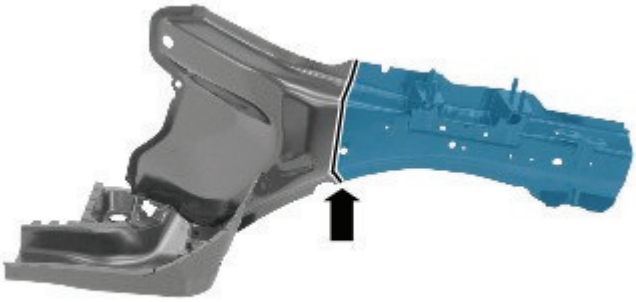

E84791

8. MIG weld the butt joint.

9. Dress all welded joints.

10. The installation of associated panels and mechanical components is the reverse of removal.

Published: 11-May-2011

Front End Sheet Metal Repairs - Suspension Top Mount

Removal and Installation

Removal

- NOTE: The suspension top mount is serviced as a separate weld-on panel.
- NOTE: The service panel is not fully welded.
- NOTE: The panel is serviced less its weld studs

1. The suspension top mount is replaced in conjunction with:

- Front bumper cover
- Front bumper armature
- Hood
- Hood latch panel
- Both front fenders
- Fender apron upper panel
- Fender apron panel
- Instrument panel

- NOTE: It is also necessary to remove the engine and suspension as an assembly.

2. For additional information relating to this repair procedure please see the following:
For additional information, refer to: Body and Frame (501-26 Body Repairs - Vehicle Specific Information and Tolerance Checks, Description and Operation) / Standard Workshop Practices (100-00 General Information, Description and Operation).

3. Remove the fender apron panel.
For additional information, refer to: Fender Apron Panel (501-27 Front End Sheet Metal Repairs, Removal and Installation).

4. Remove the instrument panel.
For additional information, refer to: Instrument Panel - TD4 2.2L Diesel (501-12 Instrument Panel and Console, Removal and Installation).

5. Remove the rocker panel inner trim panel.

6. Remove the B-pillar lower trim panel.
For additional information, refer to: B-Pillar Lower Trim Panel (501-05 Interior Trim and Ornamentation, Removal and Installation).

7. Remove the engine and front suspension as an assembly.

8. RH Side: Remove the pedal box.

9. RH Side: Remove the brake master cylinder.
For additional information, refer to: Brake Master Cylinder (206-06 Hydraulic Brake Actuation, Removal and Installation).

10. Release and lay aside the carpet and insulating material at the inner bulkhead.

11. Release and lay aside the wiring harness.

12. Mill out the spot welds.

13. Separate the joints and remove the old panel.

Installation

1. Prepare and MIG plug weld the new panel in the area illustrated, where it is not fully welded.

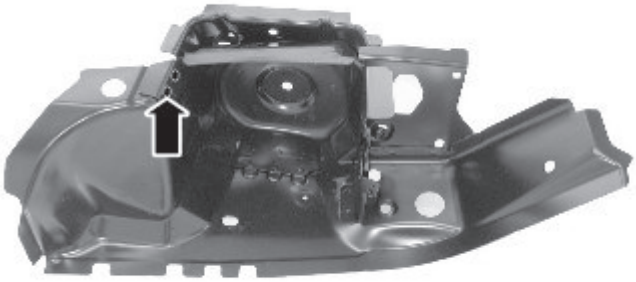

E85498

2. Prepare the old and new panel joint surfaces.
3. Drill holes in the new panel ready for MIG plug welding.

E85499

4. Offer up the new panel and clamp into position. Check alignment, if correct, proceed to next step, if not, rectify and recheck before proceeding.
5. MIG Plug weld.

E85500

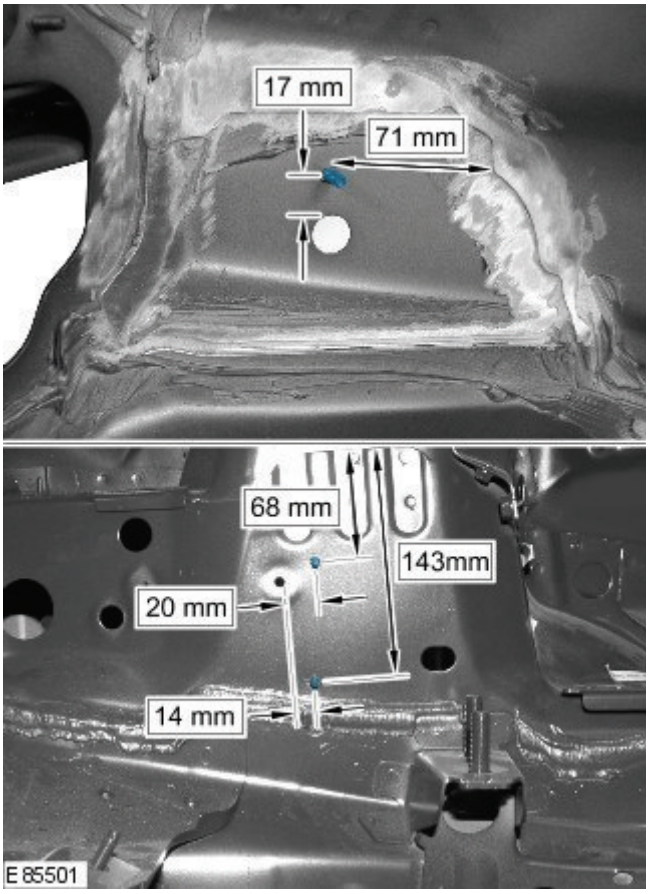

6. Install weld studs.

7. Dress all welded joints.

8. The installation of associated panels and mechanical components is the reverse of removal.

Published: 11-May-2011

Front End Sheet Metal Repairs - Front Side Member Section

Removal and Installation

Removal

• NOTE: The front side member section is cut from the front side member service panel.

• NOTE: The RH section is slightly shorter than the LH due to the location of the engine mounting.

• NOTE: Due to the combined thickness of the panels, it is recommended that spot welds are replaced with MIG plug welds in this repair.

1. The front side member section is replaced in conjunction with:

- Front bumper cover
- Front bumper armature
- Hood latch panel
- Both front fenders
- Front bumper mounting

• NOTE: It is also necessary to remove the engine and suspension as an assembly.

2. For additional information relating to this repair procedure please see the following:
For additional information, refer to: Body and Frame (501-26 Body Repairs - Vehicle Specific Information and Tolerance Checks, Description and Operation) / Standard Workshop Practices (100-00 General Information, Description and Operation).

3. Remove the front bumper mounting.
For additional information, refer to: Front Bumper Mounting (501-27 Front End Sheet Metal Repairs, Removal and Installation).

4. Remove the radiator cooling pack.
For additional information, refer to: Radiator (303-03A Engine Cooling - I6 3.2L Petrol, Removal and Installation).

5. Remove the engine and front suspension as an assembly.

6. LH Side: Remove the air intake pipe.

7. LH Side: Release the battery junction box and position aside.

8. RH Side: Remove the windshield washer reservoir.
For additional information, refer to: Windshield Washer Reservoir (501-16 Wipers and Washers, Removal and Installation).

9. Release and lay aside the wiring harness.

10. Mill out the spot welds.

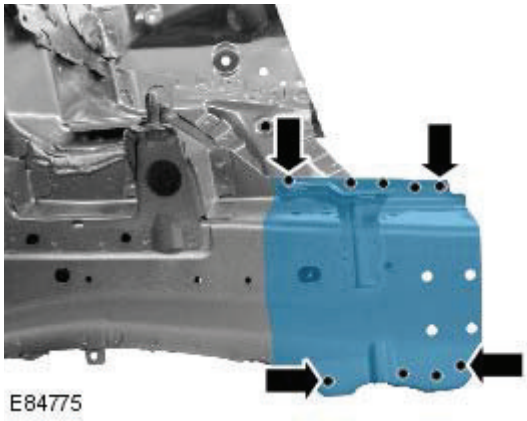

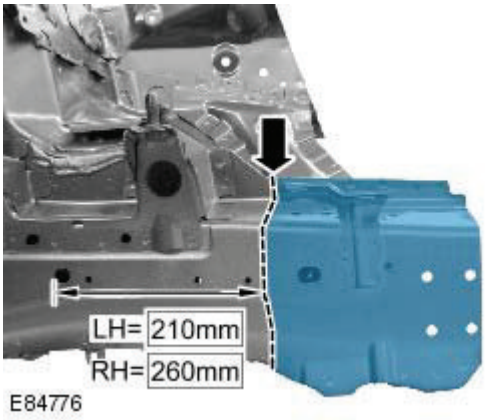

11. Saw cut the old panel at the point illustrated.

12. Separate the joints and remove the old panel.

Installation

1. Saw cut the new section from the service panel, ensure the cut is made to align with the cut in the old panel.

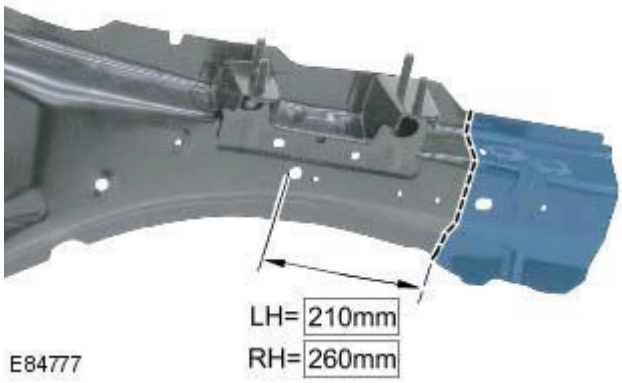

2. Prepare the old and new panel joint surfaces.

3. Drill holes in the new panel ready for MIG plug welding.

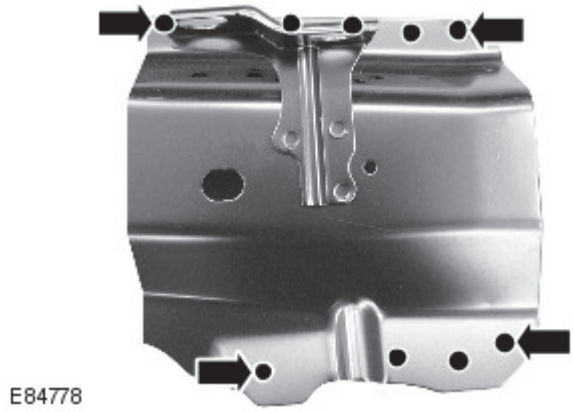

4. Offer up the new panel and clamp into position. Check alignment, if correct, proceed to next step, if not, rectify and recheck before proceeding.

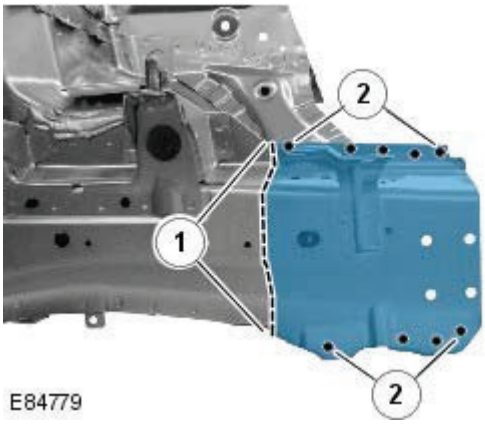

5. With panels clamped into position:

1. Tack weld the butt joint.
2. MIG plug weld.

6. Dress the tack welds.

7. MIG weld the butt joint.

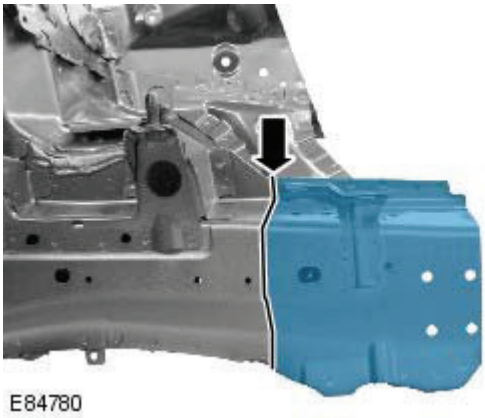

8. Dress all welded joints.

9. The installation of associated panels and mechanical components is the reverse of removal.

Published: 11-May-2011

Front End Sheet Metal Repairs - Fender Apron Panel

Removal and Installation

Removal

• NOTE: The fender apron panel is serviced as a separate weld-on panel. It is an assembly of the fender apron panel reinforcement, fender apron lower panel and fender apron panel front extension.

• NOTE: The panel is serviced less its weld studs

1. The fender apron panel is replaced in conjunction with:

- Front bumper cover
- Hood latch panel
- Both front fenders
- Fender apron upper panel

2. For additional information relating to this repair procedure please see the following:
For additional information, refer to: Body and Frame (501-26 Body Repairs - Vehicle Specific Information and Tolerance Checks, Description and Operation) / Standard Workshop Practices (100-00 General Information, Description and Operation).

3. Remove the fender apron upper panel.
For additional information, refer to: Fender Apron Upper Panel (501-27 Front End Sheet Metal Repairs, Removal and Installation).

4. LH Side: Remove the air cleaner.
For additional information, refer to: Air Cleaner (303-12A Intake Air Distribution and Filtering - I6 3.2L Petrol, Removal and Installation).

5. LH Side: Remove the air intake pipe.

6. LH Side: Remove the battery tray.
For additional information, refer to: Battery Tray (414-01 Battery, Mounting and Cables, Removal and Installation).

7. LH Side: Remove the engine lower support insulator.
For additional information, refer to: Engine Lower Support Insulator (303-01A Engine - I6 3.2L Petrol, Removal and Installation).

8. LH Side: Release the battery junction box and position aside.

9. RH Side: Drain the cooling system.
For additional information, refer to: Cooling System Draining, Filling and Bleeding (303-03A Engine Cooling - I6 3.2L Petrol, General Procedures).

10. RH Side: Evacuate the A/C system.
For additional information, refer to: Air Conditioning (A/C) System Recovery, Evacuation and Charging (412-00 Climate Control System - General Information, General Procedures).

11. RH Side: Remove the power steering reservoir.
For additional information, refer to: Power Steering Fluid Reservoir (211-02 Power Steering, Removal and Installation).

12. RH Side: Release the coolant expansion tank and position aside.

13. RH Side: Remove the engine mounting bracket.
For additional information, refer to: Engine Mount RH (303-01A Engine - I6 3.2L Petrol, Removal and Installation).

14. RH Side: Remove the windshield washer reservoir.
For additional information, refer to: Windshield Washer Reservoir (501-16 Wipers and Washers, Removal and Installation).

15. RH Side: Remove the fender apron A/C pipes.

16. Remove the shock absorber and spring assembly.
For additional information, refer to: Shock Absorber and Spring Assembly (204-01 Front Suspension, Removal and Installation).

17. Release and lay aside the wiring harness.

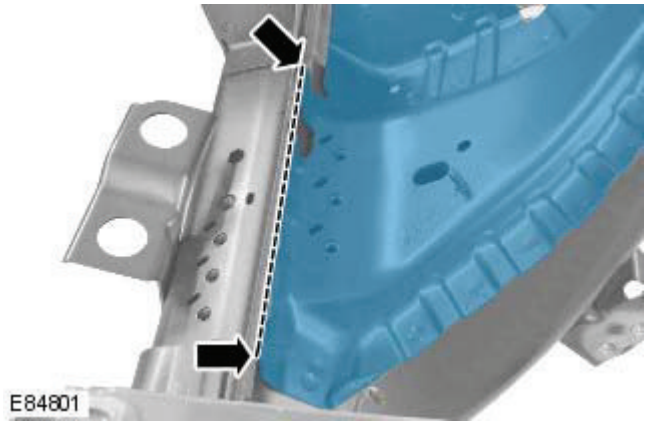

18. Use a belt sander to remove 5 x spot welds.

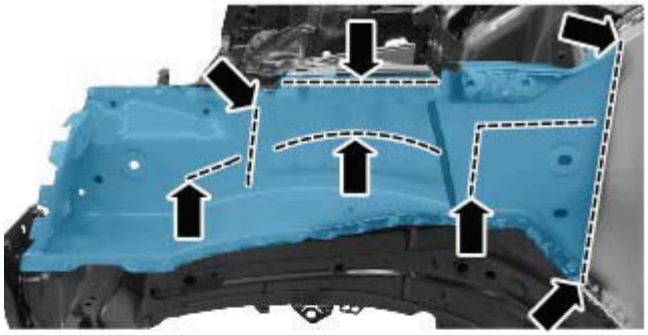

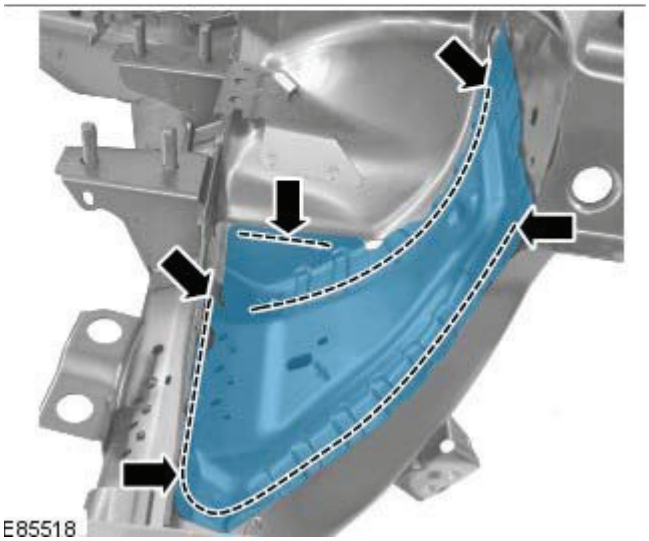

19. Mill out the remaining spot welds.

20. Separate the joints and remove the old panel.

Installation

1. Prepare the old and new panel joint surfaces.

2. Drill holes in the new panel ready for MIG plug welding.

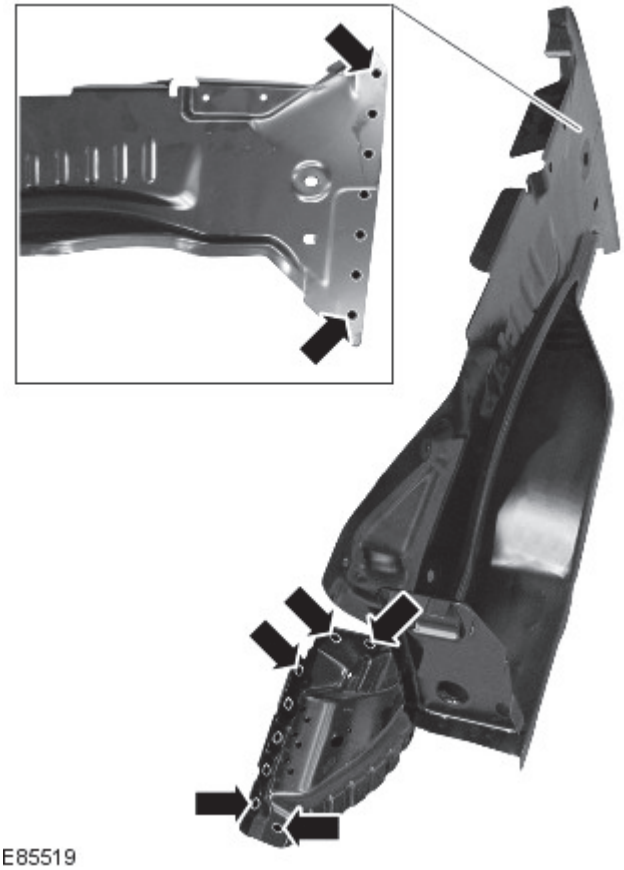

E85519

3. Offer up the new panel and clamp into position. Check alignment, if correct, proceed to next step, if not, rectify and recheck before proceeding.

4. Spot weld.

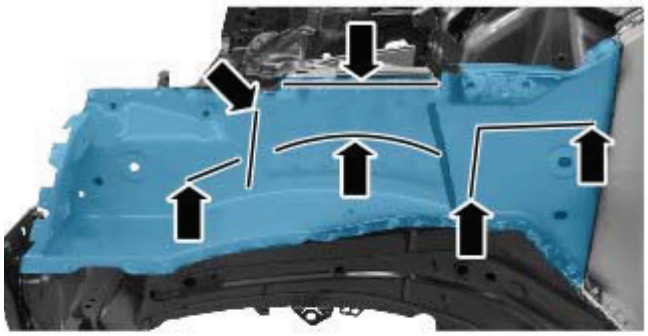

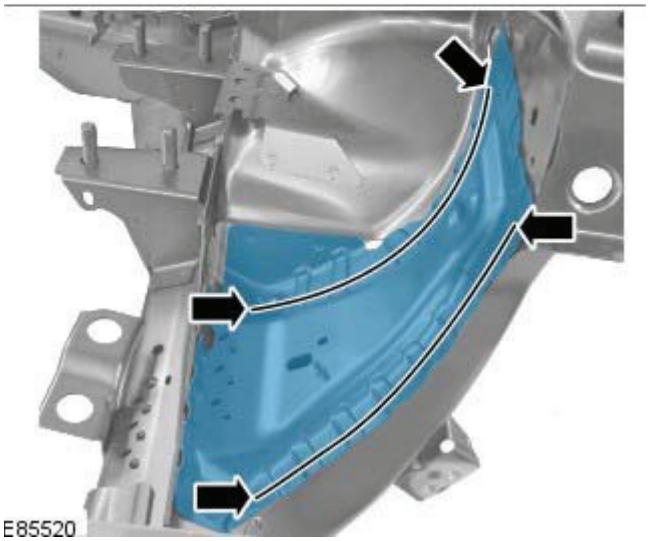

E85520

5. MIG Plug weld.

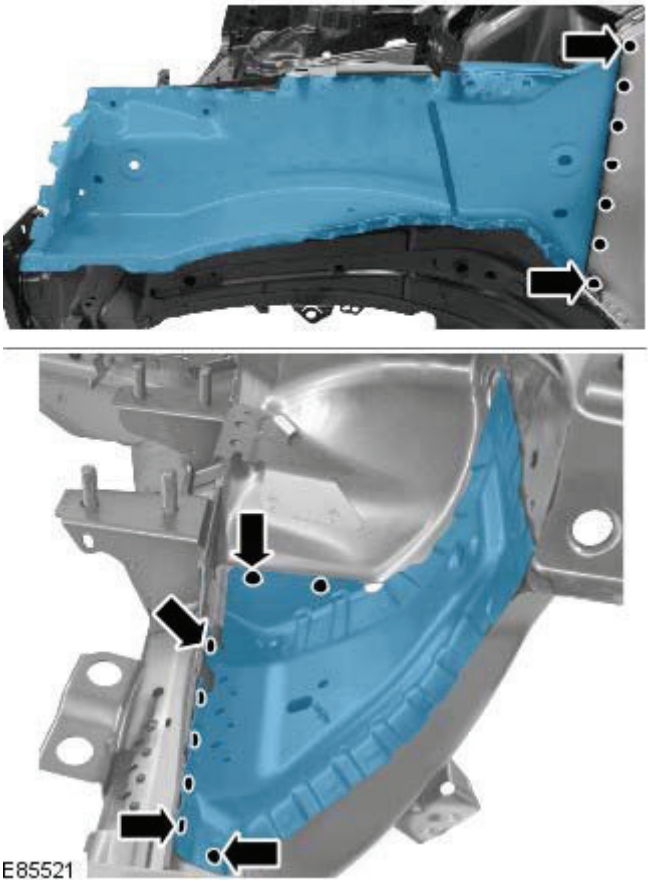

6. Install weld studs.

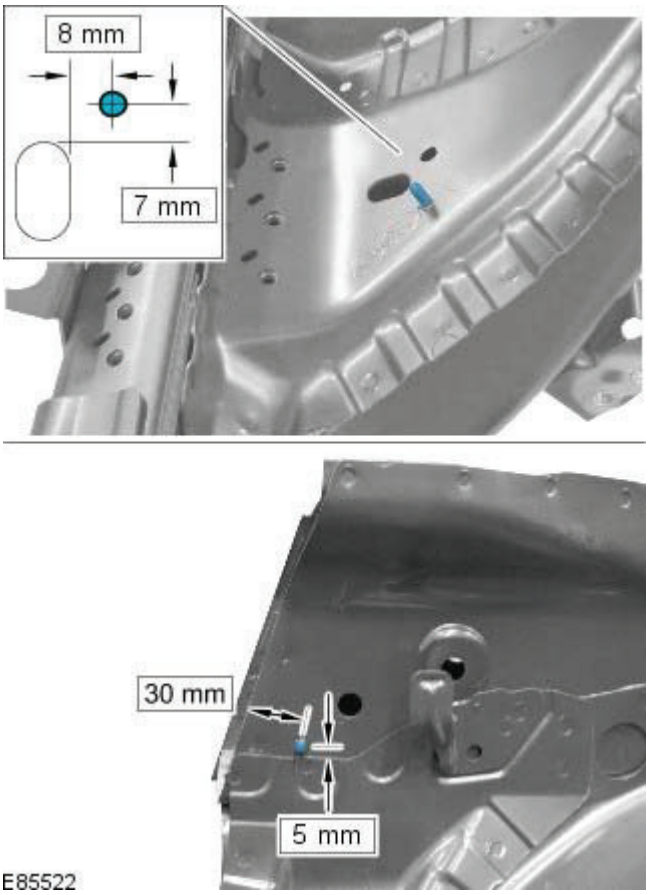

7. Dress all welded joints.

8. The installation of associated panels and mechanical components is the reverse of removal.

Published: 11-May-2011

Front End Sheet Metal Repairs - Fender Apron Panel Reinforcement

Removal and Installation

Removal

• NOTE: The fender apron panel reinforcement has to be unpicked from the fender apron panel service panel, it is not available separately.

• NOTE: The RH panel is serviced less its weld studs

1. The fender apron panel reinforcement is replaced in conjunction with:
   - Front bumper cover
   - Hood latch panel
   - Both front fenders
   - Fender apron upper panel
2. For additional information relating to this repair procedure please see the following:
   For additional information, refer to: Body and Frame (501-26 Body Repairs - Vehicle Specific Information and Tolerance Checks, Description and Operation) / Standard Workshop Practices (100-00 General Information, Description and Operation).
3. Remove the fender apron upper panel.
   For additional information, refer to: Fender Apron Upper Panel (501-27 Front End Sheet Metal Repairs, Removal and Installation).
4. Remove the front shock absorber.
   For additional information, refer to: Front Shock Absorber (204-01 Front Suspension, Removal and Installation).
5. LH Side: Remove the engine support insulator.
   For additional information, refer to: Engine Upper Support Insulator (303-01B Engine - TD4 2.2L Diesel, Removal and Installation).
6. LH Side: Remove the battery tray.
   For additional information, refer to: Battery Tray (414-01 Battery, Mounting and Cables, Removal and Installation).
7. LH Side: Remove the air intake pipe.
8. LH Side: Release the battery junction box and position aside.
9. RH Side: Remove the windshield washer reservoir.
   For additional information, refer to: Windshield Washer Reservoir (501-16 Wipers and Washers, Removal and Installation).
10. RH Side: Remove the engine mounting bracket.
    For additional information, refer to: Engine Mount RH (303-01B Engine - TD4 2.2L Diesel, Removal and Installation).
11. RH Side: Release the coolant expansion tank and lay it aside.
12. RH Side: Evacuate the A/C system.
    For additional information, refer to: Air Conditioning (A/C) System Recovery, Evacuation and Charging (412-00 Climate Control System - General Information, General Procedures).
13. RH Side: Remove the fender apron A/C pipes.
14. RH Side: Release and lay aside the insulating material at the bulkhead.
15. Release and lay aside the wiring harness.

16. Mill out the spot welds.

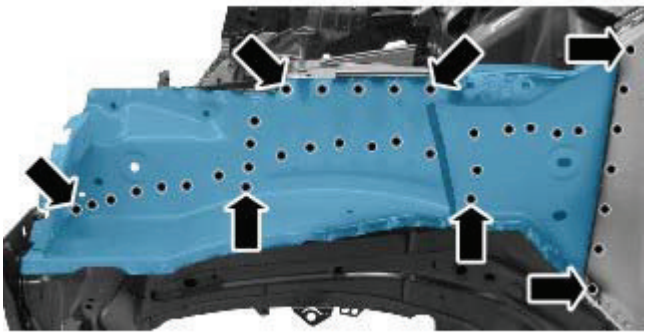

E85488

17. Separate the joints and remove the old panel.

Installation

1. Prepare the old and new panel joint surfaces.

2. Drill holes in the new panel ready for MIG plug welding.

E85489

3. Offer up the new panel and clamp into position. Check alignment, if correct, proceed to next step, if not, rectify and recheck before proceeding.

4. Spot weld.

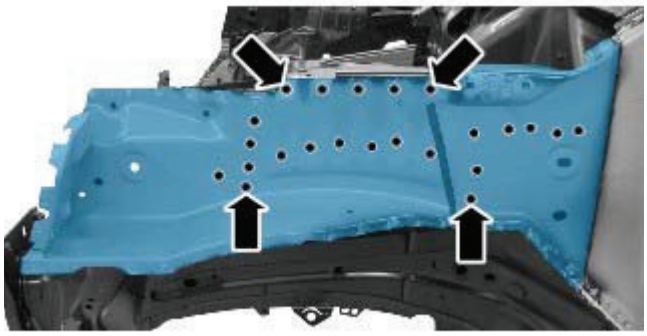

E85559

5. MIG Plug weld.

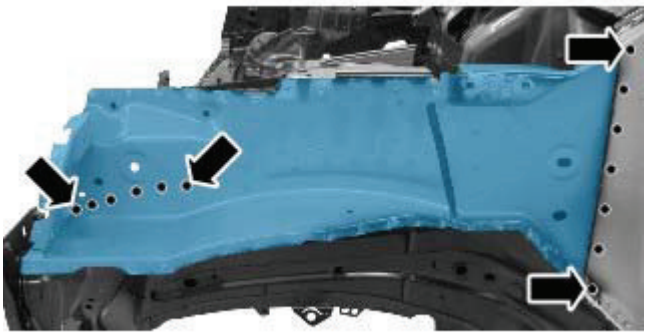

E85490

6. Install weld studs.

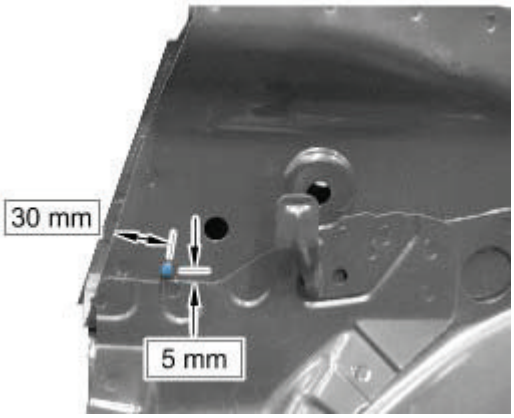

E85492

7. Dress all welded joints.

8. The installation of associated panels and mechanical components is the reverse of removal.

Published: 11-May-2011

Front End Sheet Metal Repairs - Fender Apron Panel Front Extension

Removal and Installation

Removal

• NOTE: The fender apron panel front extension has to be unpicked from the fender apron panel, it is not serviced separately.

1. The fender apron panel front extension is replaced in conjunction with:
   - Front bumper cover
   - Hood latch panel
   - Both front fenders
2. For additional information relating to this repair procedure please see the following:
   For additional information, refer to: Body and Frame (501-26 Body Repairs - Vehicle Specific Information and Tolerance Checks, Description and Operation) / Standard Workshop Practices (100-00 General Information, Description and Operation).
3. Remove the hood latch panel.
   For additional information, refer to: Hood Latch Panel (501-27, Removal and Installation).
4. Mill out the spot welds.

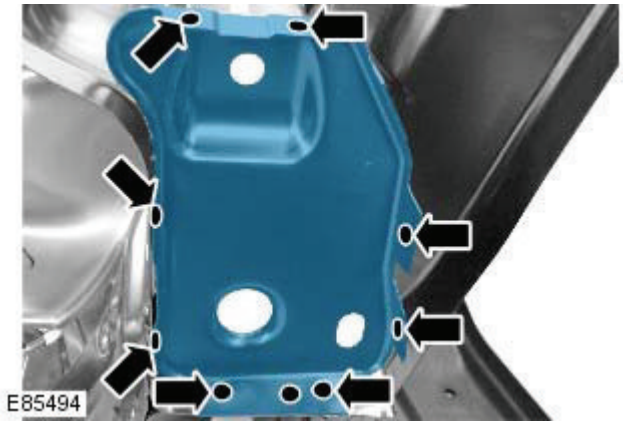

5. Separate the joints and remove the old panel.

Installation

1. Prepare the old and new panel joint surfaces.
2. Offer up the new panel and clamp into position. Check alignment, if correct, proceed to next step, if not, rectify and recheck before proceeding.
3. Spot weld at the points illustrated.

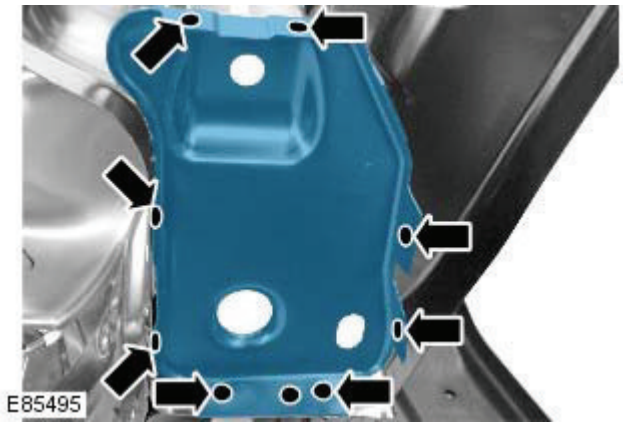

4. Dress all welded joints.
5. The installation of associated panels and mechanical components is the reverse of removal.

Published: 11-May-2011

Front End Sheet Metal Repairs - Fender Apron Lower Panel

Removal and Installation

Removal

• NOTE: The fender apron lower panel is to be removed from the fender apron panel service panel; it is not available separately.

• NOTE: The panel is serviced less its weld studs

1. The fender apron lower panel is replaced in conjunction with:

- Front bumper cover
- Hood latch panel
- Both front fenders

2. For additional information relating to this repair procedure please see the following:
For additional information, refer to: Body and Frame (501-26 Body Repairs - Vehicle Specific Information and Tolerance Checks, Description and Operation) / Standard Workshop Practices (100-00 General Information, Description and Operation).

3. Remove the hood latch panel.
For additional information, refer to: Hood Latch Panel (501-27, Removal and Installation).

4. Use a belt sander to sand down the spot welds in the area illustrated.

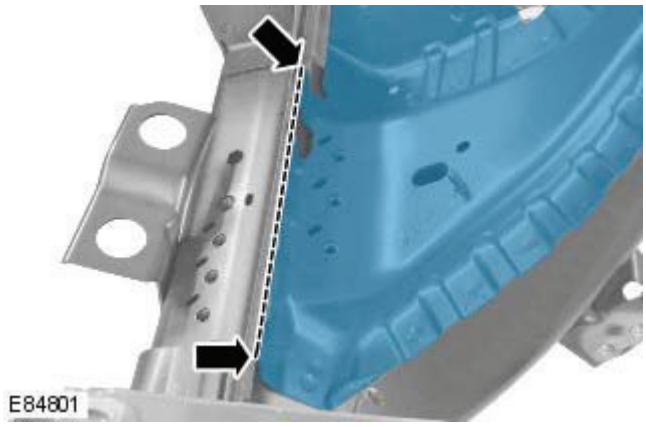

5. Mill out the remaining spot welds.

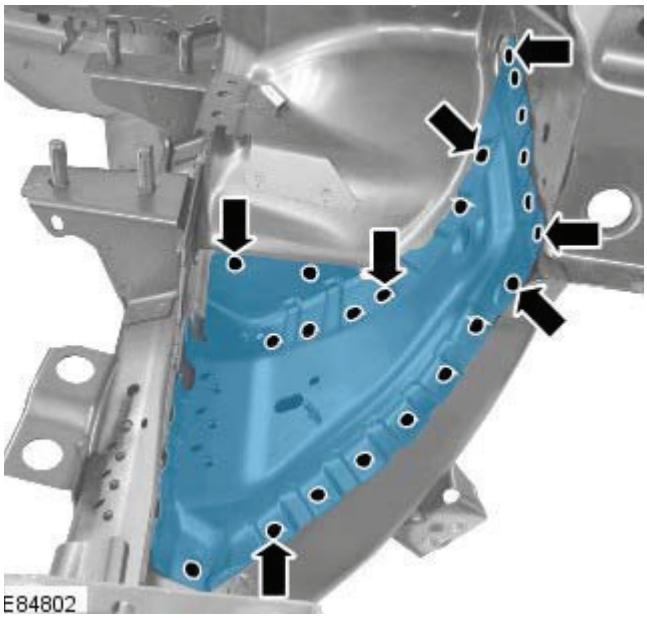

6. Separate the joints and remove the old panel.

Installation

1. Prepare the old and new panel joint surfaces.

2. Drill holes in the new panel ready for MIG plug welding.

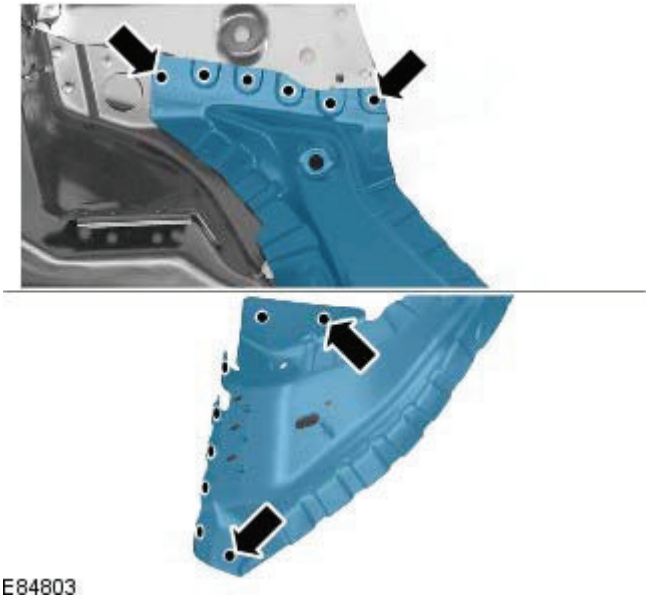

3. Offer up the new panel and clamp into position. Check alignment, if correct, proceed to next step, if not, rectify and recheck before proceeding.

4. MIG Plug weld.

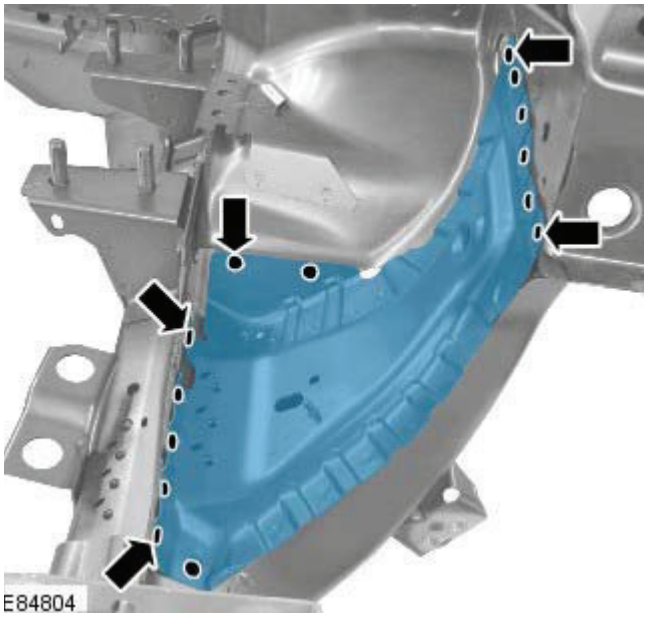

5. Spot weld.

6. Install weld stud.

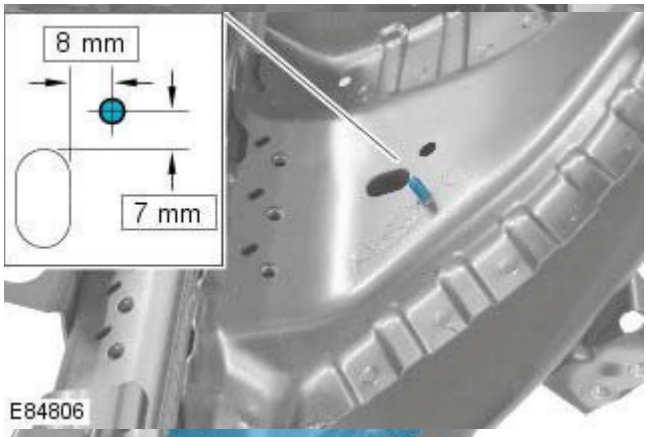

7. Dress all welded joints.

8. The installation of associated panels and mechanical components is the reverse of removal.

Published: 11-May-2011

Front End Sheet Metal Repairs - Fender Apron Upper Panel

Removal and Installation

Removal

• NOTE: The fender apron upper panel is serviced as a separate weld-on panel.

• NOTE: The service panel is not fully welded.

• NOTE: There is an NVH element attached inside this panel, it is not serviced on the new panel. Therefore, if damaged, a new element will be required.

1. The fender apron upper panel is replaced in conjunction with:

- Front bumper cover
- Hood
- Hood latch panel
- Both front fenders

2. For additional information relating to this repair procedure please see the following:
For additional information, refer to: Body and Frame (501-26 Body Repairs - Vehicle Specific Information and Tolerance Checks, Description and Operation) / Standard Workshop Practices (100-00 General Information, Description and Operation).

3. Remove the hood latch panel.
For additional information, refer to: Hood Latch Panel (501-27, Removal and Installation).

4. Remove the hood.

5. Remove the plenum chamber panel.
For additional information, refer to: Plenum Chamber (412-01 Climate Control, Removal and Installation).

6. LH Side: Remove the air intake pipe.

7. RH Side: Release and lay aside the wiring harness.

8. Remove the hood hinge, 2 x 13mm headed bolts.

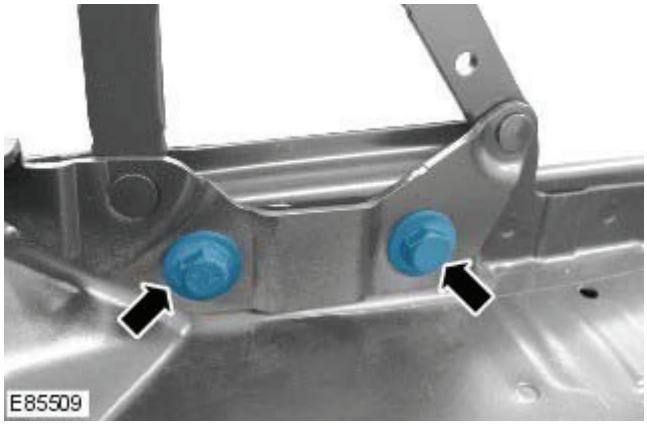

9. Mill out the spot welds.

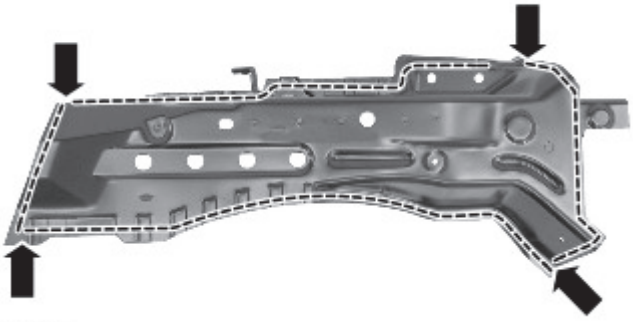

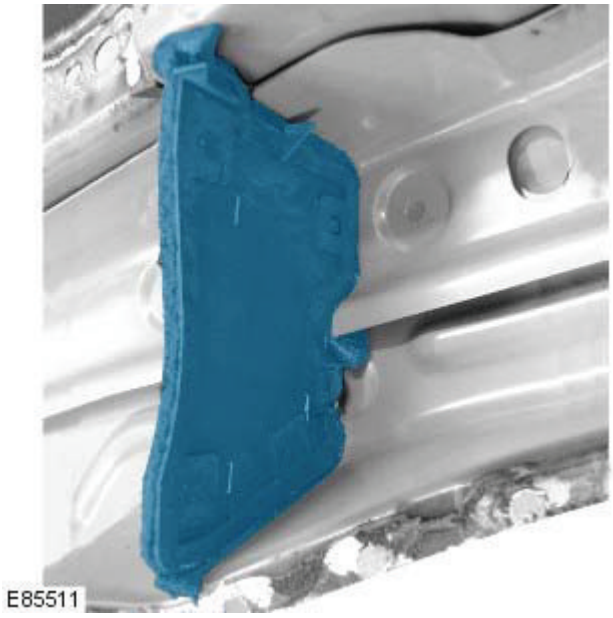

10. Separate the joints and remove the old panel, including its NVH element.

Installation

1. Prepare and spot weld the new panel in the areas illustrated, where it is not fully welded.

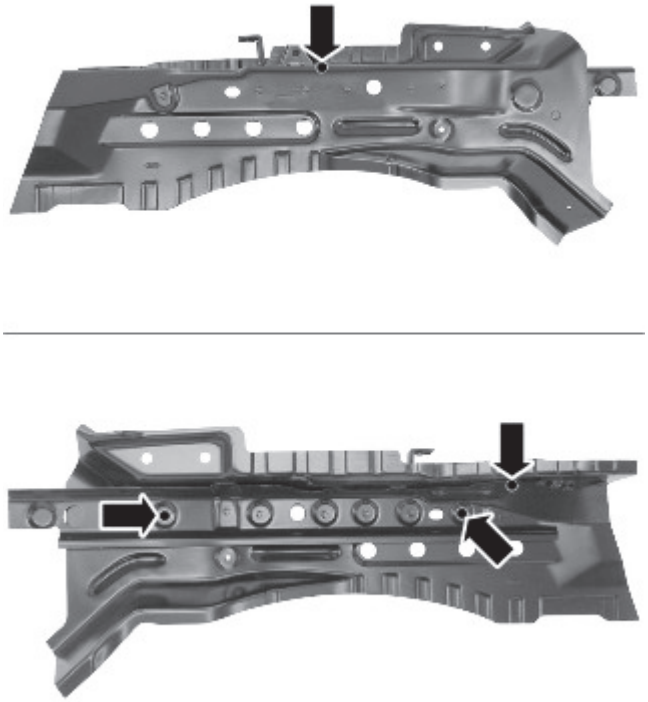

2. Prepare the old and new panel joint surfaces.

3. Drill holes in the new panel ready for MIG plug welding.

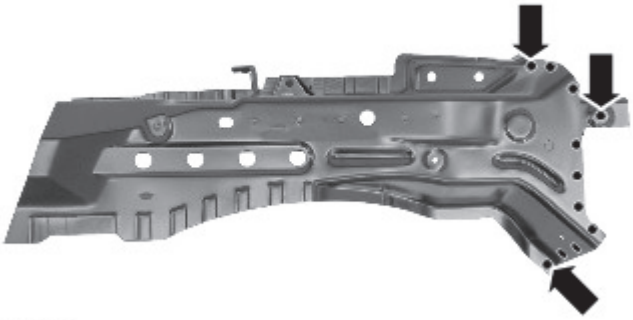

E85513

4. Offer up the new panel and clamp into position. Check alignment, if correct, proceed to next step, if not, rectify and recheck before proceeding.

5. Remove the panel and apply adhesive to the areas illustrated.

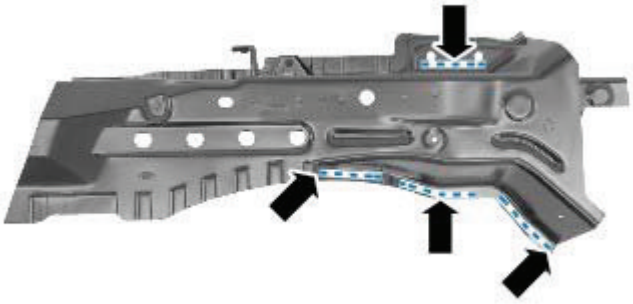

E85514

6. If necessary, renew the NVH element.

7. Apply sealer adhesive to the NVH element.

E85511

8. Offer up the new panel and clamp into position.

9. Spot weld at the points illustrated.

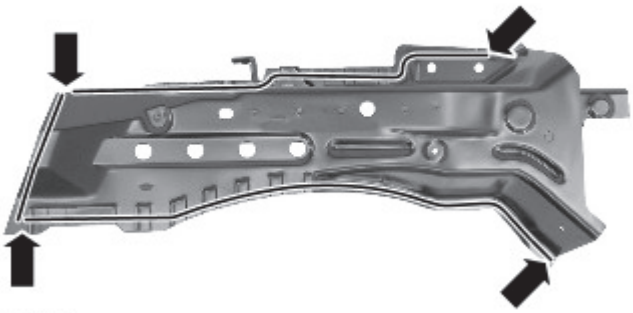

E85515

10. MIG Plug weld.

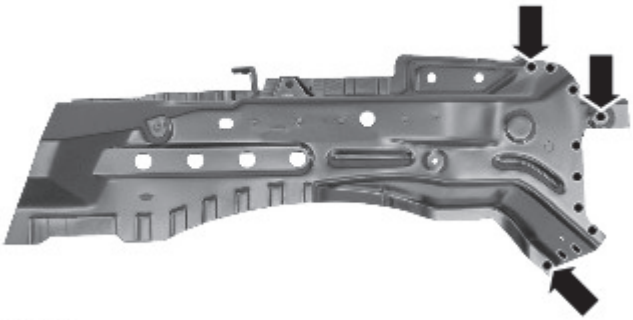

E85516

11. Dress all welded joints.

12. The installation of associated panels and mechanical components is the reverse of removal.

Published: 11-May-2011

Front End Sheet Metal Repairs - Front Side Member Closing Panel

Removal and Installation

Removal

• NOTE: The front side member closing panel must be unpicked from the front side member and suspension top mount assembly, it is not serviced separately.

• NOTE: The panel is serviced less its weld studs

1. The front side member closing panel is replaced in conjunction with:
   - Front bumper cover
   - Front bumper
   - Hood latch panel
   - Both front fenders
   - Front bumper mounting
   - Fender apron lower panel
   - Fender apron panel front reinforcement
   - Front side member

• NOTE: It is also necessary to remove the engine and suspension as an assembly.

2. For additional information relating to this repair procedure please see the following:
   For additional information, refer to: Body and Frame (501-26 Body Repairs - Vehicle Specific Information and Tolerance Checks, Description and Operation) / Standard Workshop Practices (100-00 General Information, Description and Operation).
3. Remove the front side member.
   For additional information, refer to: Front Side Member (501-27 Front End Sheet Metal Repairs, Removal and Installation).
4. Mill out the spot welds.

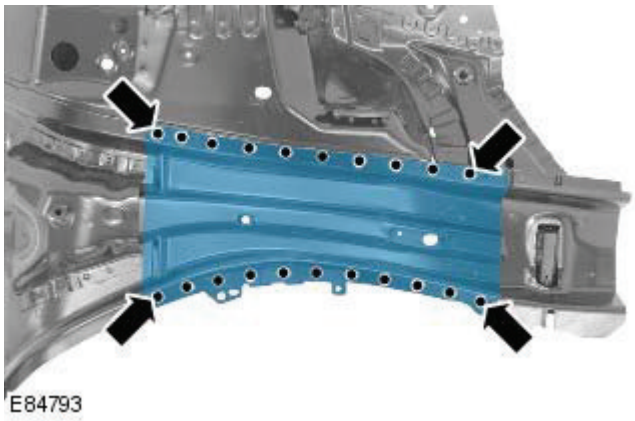
E84793

5. Saw cut the old panel at the point illustrated.

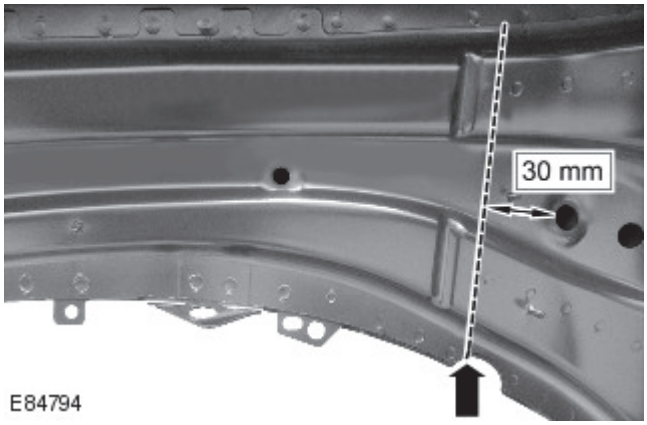

E84794

6. Separate the joints and remove the old panel.

Installation

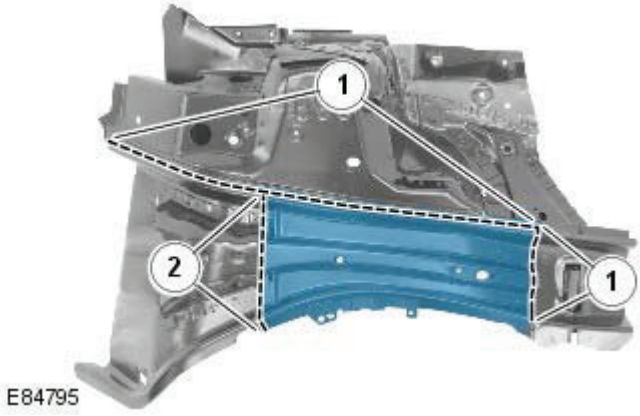

E84795

1. Remove the panel from the service panel.

1. Mill out the spot welds.
2. Saw cut, ensuring the cut aligns with the one already made on the vehicle.

2. Prepare the old and new panel joint surfaces.

3. Drill holes in the new panel ready for MIG plug welding.


E84796

4. Offer up the new panel and clamp into position. Check alignment, if correct, proceed to next step, if not, rectify and recheck before proceeding.

5. With panels clamped into position:

1. Tack weld the butt joint.
2. MIG plug weld.

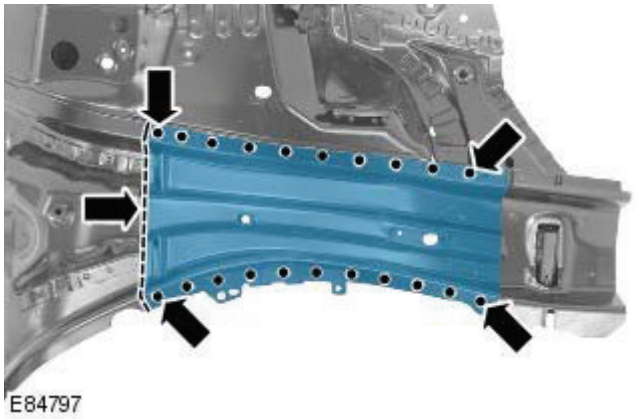
E84797

6. Dress the tack welds.

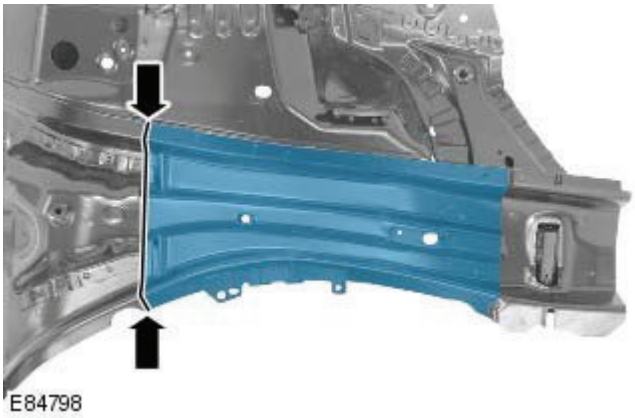

7. MIG weld the butt joint.

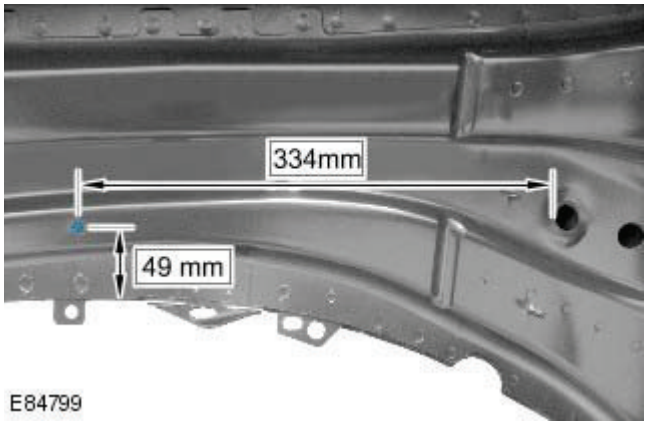

8. Install weld stud.

9. Dress all welded joints.

10. The installation of associated panels and mechanical components is the reverse of removal.

Published: 11-May-2011

Front End Sheet Metal Repairs - Fender Apron Panel Front Reinforcement

Removal and Installation

Removal

• NOTE: The fender apron panel front reinforcement has to be removed from the fender apron panel service panel; it is not available as a separate panel.

• NOTE: The panel is serviced less its weld studs

1. The front side member and fender apron panel is replaced in conjunction with:
   - Front bumper cover
   - Front bumper
   - Hood
   - Hood latch panel
   - Both front fenders
   - Fender apron lower panel
2. For additional information relating to this repair procedure please see the following:
   For additional information, refer to: Body and Frame (501-26 Body Repairs - Vehicle Specific Information and Tolerance Checks, Description and Operation) / Standard Workshop Practices (100-00 General Information, Description and Operation).
3. Remove the fender apron lower panel.
   For additional information, refer to: Fender Apron Lower Panel (501-27 Front End Sheet Metal Repairs, Removal and Installation).
4. Mill out the spot welds.

E84807

5. Separate the joints and remove the old panel.

Installation

1. Prepare the old and new panel joint surfaces.

2. Drill holes in the new panel ready for MIG plug welding.

E84807

3. Offer up the new panel and clamp into position. Check alignment, if correct, proceed to next step. If not, rectify and recheck before proceeding.

4. MIG Plug weld.

E84807

5. Install weld studs.

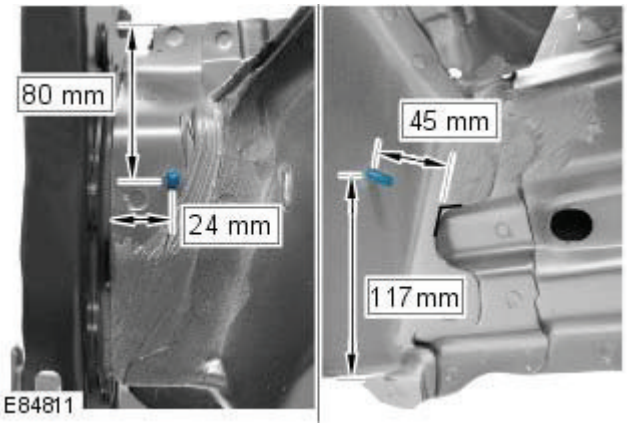

E84811

6. Dress all welded joints.

7. The installation of associated panels and mechanical components is the reverse of removal.

Published: 11-May-2011

Roof Sheet Metal Repairs - Roof

Description and Operation

Roof service panels

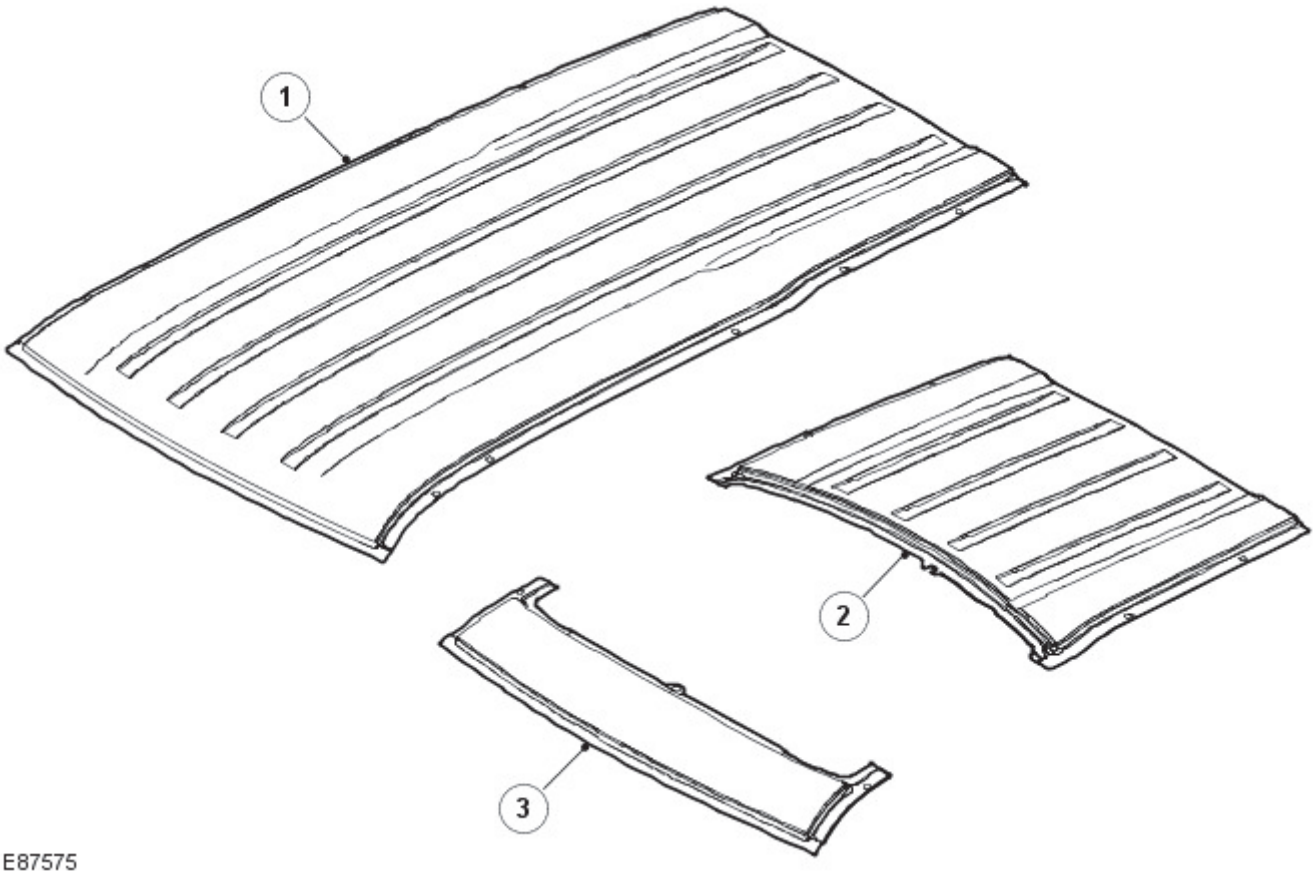

Item	Description
1	Roof panel
2	Roof rear panel
3	Roof front panel

Time schedules, roof panels

The following times relate to the replacement of the roof panels as single panels. The published times include the removal of Mechanical, Electrical and Trim, (MET), items, plus paint times based on Metallic Clear Over Base Paint, (blends to adjacent panels are not included). A corrosion protection time is included where appropriate.

The times were generated by Thatcham, (the Motor Insurance Repair Research Centre), and are to be used as a guide only, based on new undamaged panels. Job allowances are not included, as a guide Thatcham recommend 0.3 hours to be added to single panel times.

Single panel times

Panel Description	Times
Roof panel	**20.3**
Roof rear panel	**16.4**
Roof front panel	**14.4**

Published: 11-May-2011

Roof Sheet Metal Repairs - Roof PanelVehicles Without: Sliding Roof Opening Panel

Removal and Installation

Removal

• NOTE: The roof is serviced as a separate weld on panel, less its reinforcements.

• NOTE: Along the RH and LH sides of the panel, spot welds should be installed adjacent to the originals and not in the same locations.

1. The roof panel is replaced in conjunction with:

- Liftgate
- Windshield

2. For additional information relating to this repair procedure please see the following:
For additional information, refer to: Body and Frame (501-26 Body Repairs - Vehicle Specific Information and Tolerance Checks, Description and Operation) / Standard Workshop Practices (100-00 General Information, Description and Operation).

3. Disconnect both battery cables.

4. Remove the liftgate.
For additional information, refer to: Liftgate (501-03 Body Closures, Removal and Installation).

5. Remove the windshield glass.
For additional information, refer to: Windshield Glass (501-11 Glass, Frames and Mechanisms, Removal and Installation).

6. Remove both front seats.
For additional information, refer to: Front Seat (501-10 Seating, Removal and Installation).

7. Remove the rear seat.

8. Remove both side air curtain modules.
For additional information, refer to: Side Air Bag Module (501-20B Supplemental Restraint System, Removal and Installation).

9. Remove both front safety belt retractors.
For additional information, refer to: Front Safety Belt Retractor (501-20A Safety Belt System, Removal and Installation).

10. Remove both rear safety belt retractors.
For additional information, refer to: Rear Safety Belt Retractor (501-20A Safety Belt System, Removal and Installation).

11. Release and lay aside the wiring harness.

12. Remove 10 21mm headed bolts.

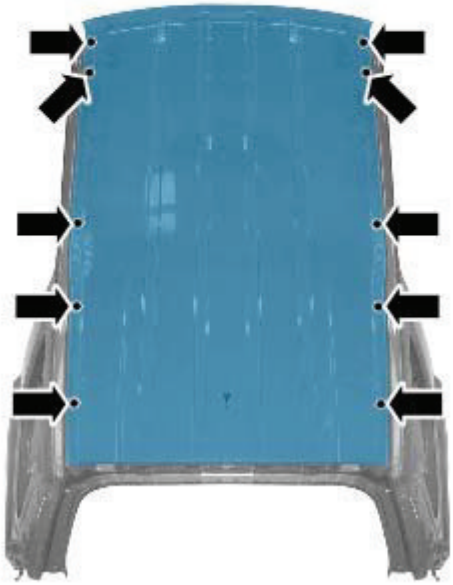

E85973

13. Mill out the spot welds.

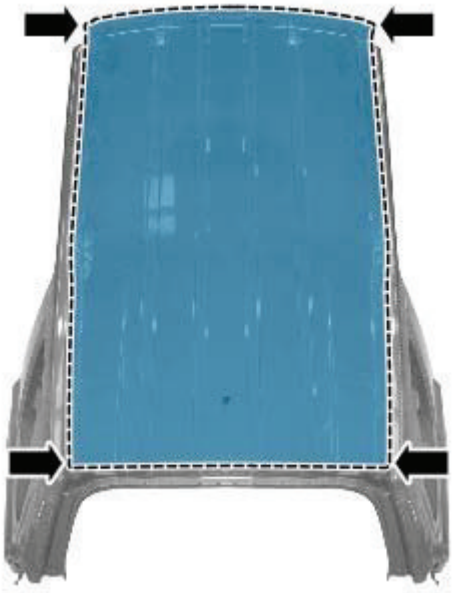

E85974

14. Cut through the adhesive to separate the reinforcements from the roof panel.

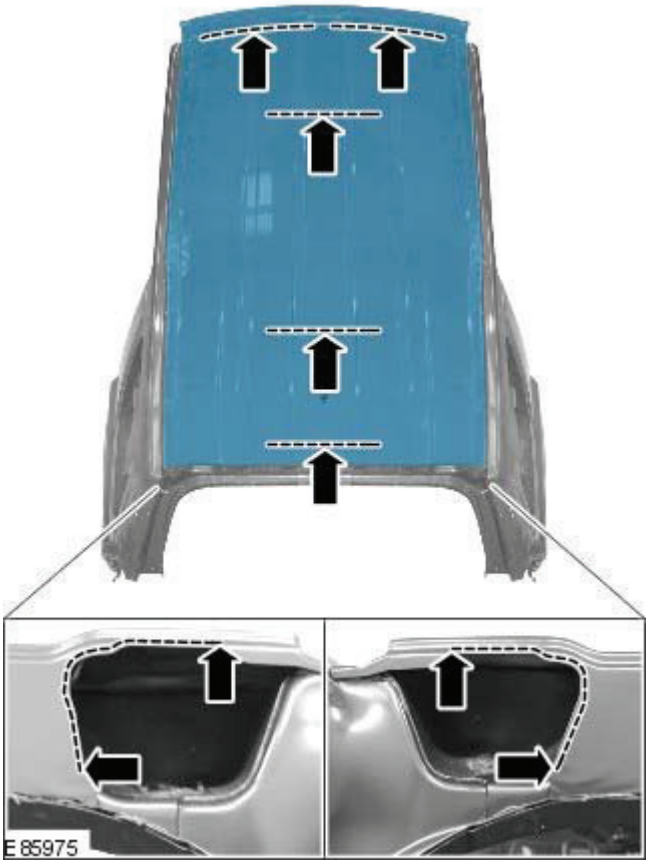

15. Separate the remaining joints and remove the old panel.

Installation

1. Prepare the old and new panel joint surfaces.

2. Apply adhesive, in the areas illustrated.

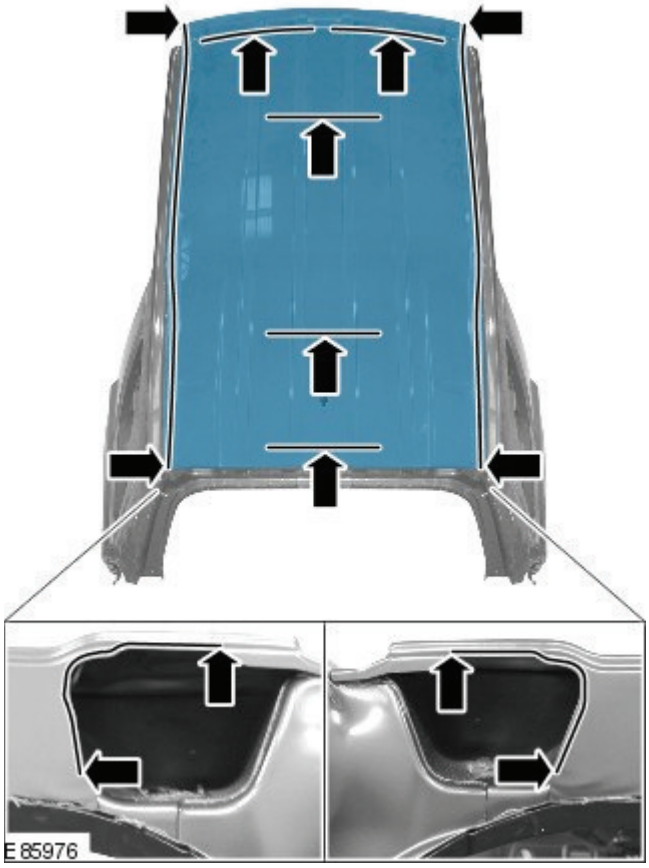

3. Offer up the new panel and clamp into position. Check

alignment, if correct, proceed to next step, if not, rectify and recheck before proceeding.

4. Install 10 21mm bolts.

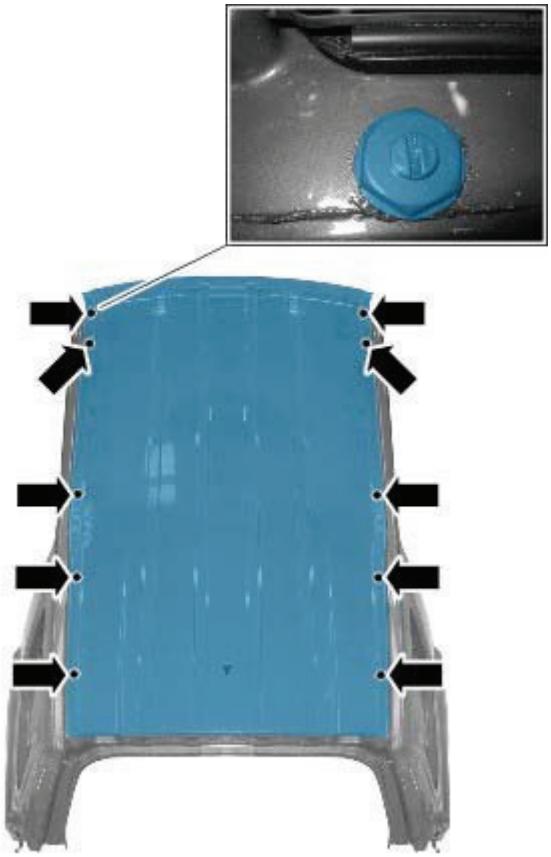

E85977

5. NOTE: Along the RH and LH sides of the panel, spot welds should be installed adjacent to the originals and not in the same locations.

Spot weld.

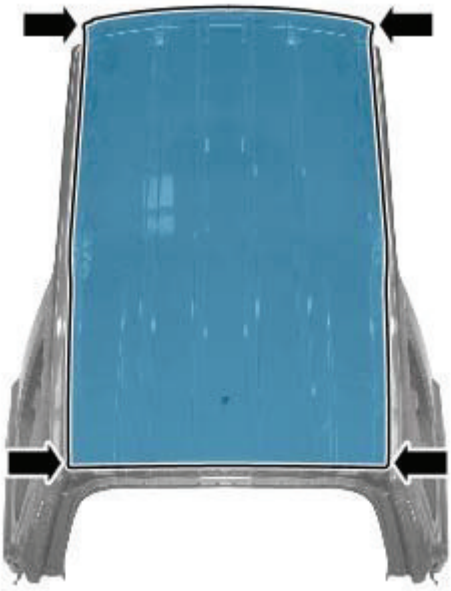

E85978

6. Dress all welded joints.

7. The installation of associated panels and mechanical components is the reverse of removal.

Published: 11-May-2011

Roof Sheet Metal Repairs - Roof Front PanelVehicles With: Sliding Roof Opening Panel

Removal and Installation

Removal

- NOTE: The roof front panel is serviced as a separate weld-on panel.

1. The roof front panel is replaced in conjunction with:

- Windshield
- Roof opening panel

2. For additional information relating to this repair procedure please see the following:
For additional information, refer to: Body and Frame (501-26 Body Repairs - Vehicle Specific Information and Tolerance Checks, Description and Operation) / Standard Workshop Practices (100-00 General Information, Description and Operation).

3. Disconnect both battery cables.

4. Remove the windshield glass.
For additional information, refer to: Windshield Glass (501-11 Glass, Frames and Mechanisms, Removal and Installation).

5. Remove both front seats.
For additional information, refer to: Front Seat (501-10 Seating, Removal and Installation).

6. Remove the roof opening panel.
For additional information, refer to: Roof Opening Panel (501-17 Roof Opening Panel, Removal and Installation).

7. Remove both side air curtain modules.
For additional information, refer to: Side Air Curtain Module (501-20B Supplemental Restraint System, Removal and Installation).

8. Remove both front safety belt retractors.
For additional information, refer to: Front Safety Belt Retractor (501-20A Safety Belt System, Removal and Installation).

9. Remove both rear safety belt retractors.
For additional information, refer to: Rear Safety Belt Retractor (501-20A Safety Belt System, Removal and Installation).

10. Release and lay aside the wiring harness.

11. Remove 2 21mm headed bolts, 1 each side.

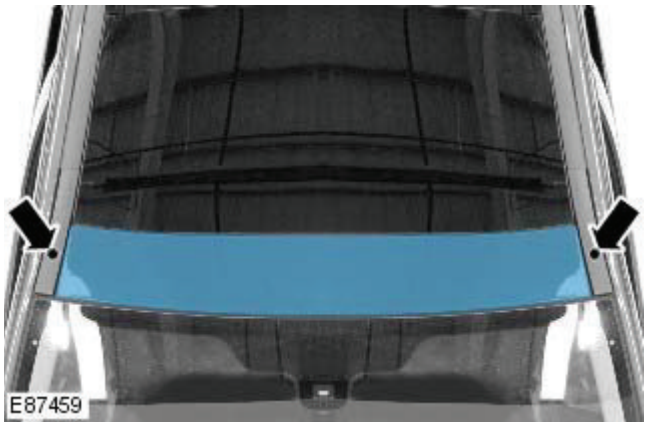

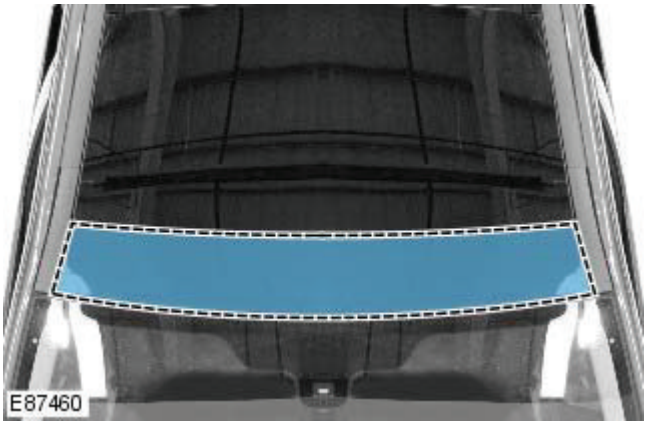

12. Mill out the spot welds.

13. Separate the joints and remove the old panel.

Installation

1. Prepare the old and new panel joint surfaces.

2. Apply adhesive, in the areas illustrated.

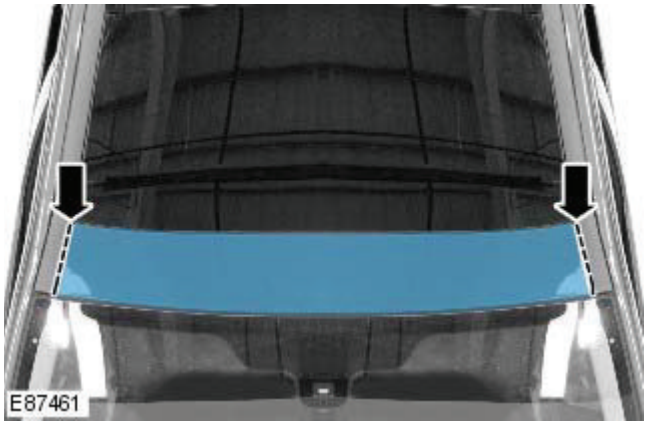

3. Offer up the new panel and clamp into position. Check alignment, if correct, proceed to next step, if not, rectify and recheck before proceeding.

4. Install 2 21mm bolts.

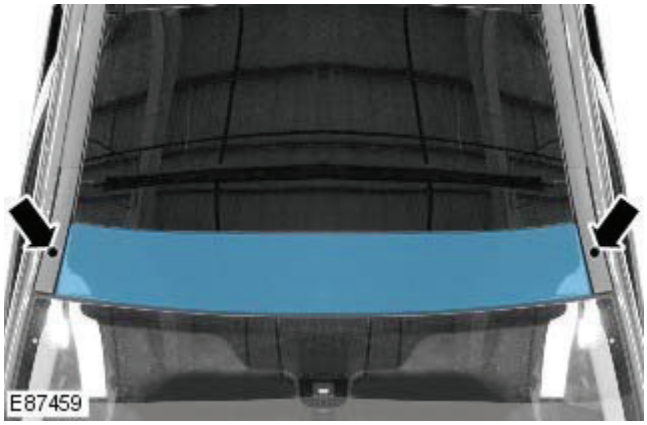

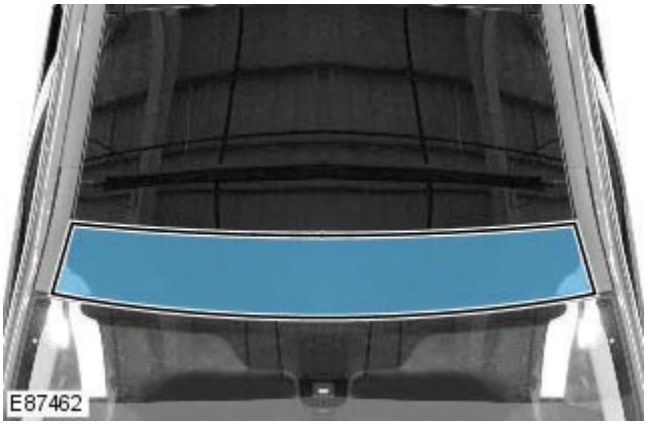

5. Spot weld.

6. Dress all welded joints.

7. The installation of associated panels and mechanical components is the reverse of removal.

Published: 11-May-2011

Roof Sheet Metal Repairs - Roof Rear PanelVehicles With: Sliding Roof Opening Panel

Removal and Installation

Removal

• NOTE: The roof rear panel is serviced as a separate weld-on panel, less its reinforcements.

• NOTE: Along the RH and LH sides of the panel, spot welds should be installed adjacent to the originals and not in the same locations.

1. The roof rear panel is replaced in conjunction with:

- Liftgate
- Roof opening panel

2. For additional information relating to this repair procedure please see the following:
For additional information, refer to: Body and Frame (501-26 Body Repairs - Vehicle Specific Information and Tolerance Checks, Description and Operation) / Standard Workshop Practices (100-00 General Information, Description and Operation).

3. Disconnect both battery cables.

4. Remove the liftgate.
For additional information, refer to: Liftgate (501-03 Body Closures, Removal and Installation).

5. Remove both front seats.
For additional information, refer to: Front Seat (501-10 Seating, Removal and Installation).

6. Remove the rear seat.

7. Remove the roof opening panel.
For additional information, refer to: Roof Opening Panel (501-17 Roof Opening Panel, Removal and Installation).

8. Remove both side air curtain modules.
For additional information, refer to: Side Air Bag Module (501-20B Supplemental Restraint System, Removal and Installation).

9. Remove both front safety belt retractors.
For additional information, refer to: Front Safety Belt Retractor (501-20A Safety Belt System, Removal and Installation).

10. Remove both rear safety belt retractors.
For additional information, refer to: Rear Safety Belt Retractor (501-20A Safety Belt System, Removal and Installation).

11. Release and lay aside the wiring harness.

12. Remove 4 21mm headed bolts, 2 each side.

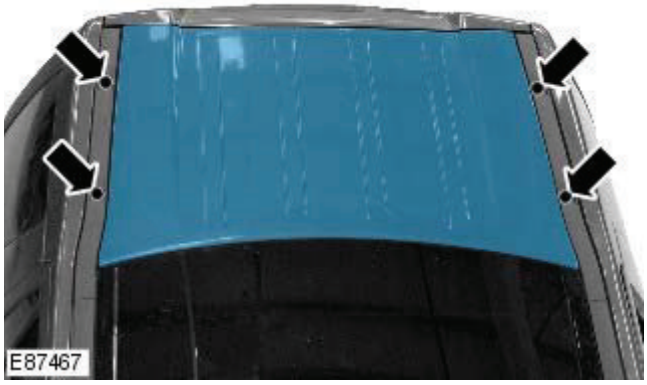

13. Mill out the spot welds.

14. Cut through the adhesive to separate the reinforcements from the roof rear panel.

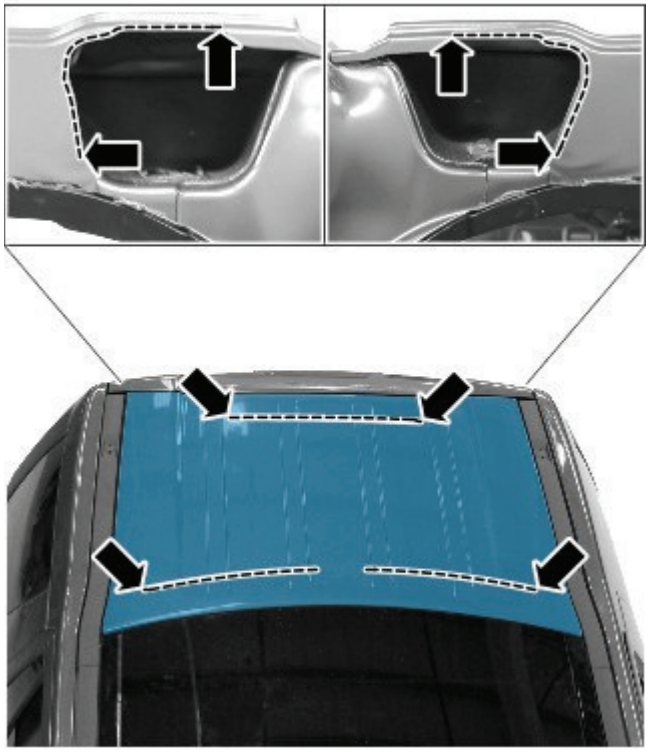

E87465

15. Separate the remaining joints and remove the old panel.

Installation

1. Prepare the old and new panel joint surfaces.

2. Apply adhesive, in the areas illustrated.

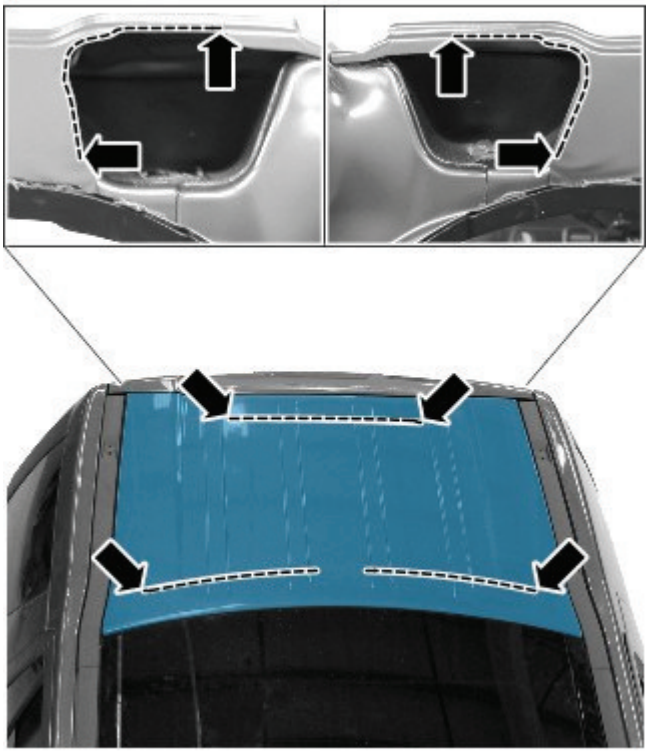

E87465

3. Offer up the new panel and clamp into position. Check alignment, if correct, proceed to next step, if not, rectify and recheck before proceeding.

4. Install 4 21mm bolts.

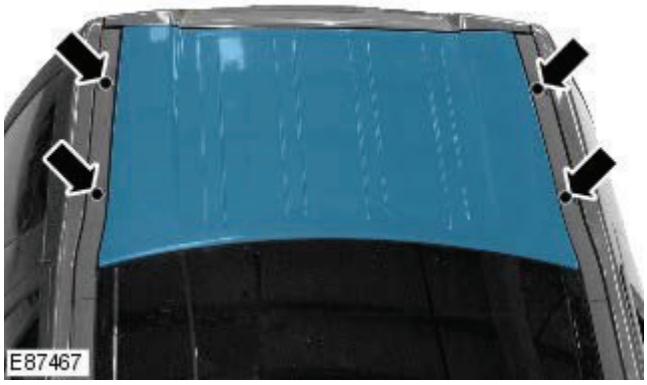

E87467

5. NOTE: Along the RH and LH sides of the panel, spot welds should be installed adjacent to the originals and not in the same locations.

Spot weld.

E87469

6. Dress all welded joints.

7. The installation of associated panels and mechanical

Published: 11-May-2011

Side Panel Sheet Metal Repairs - Side Panel Sheet Metal

Description and Operation

Side service panels

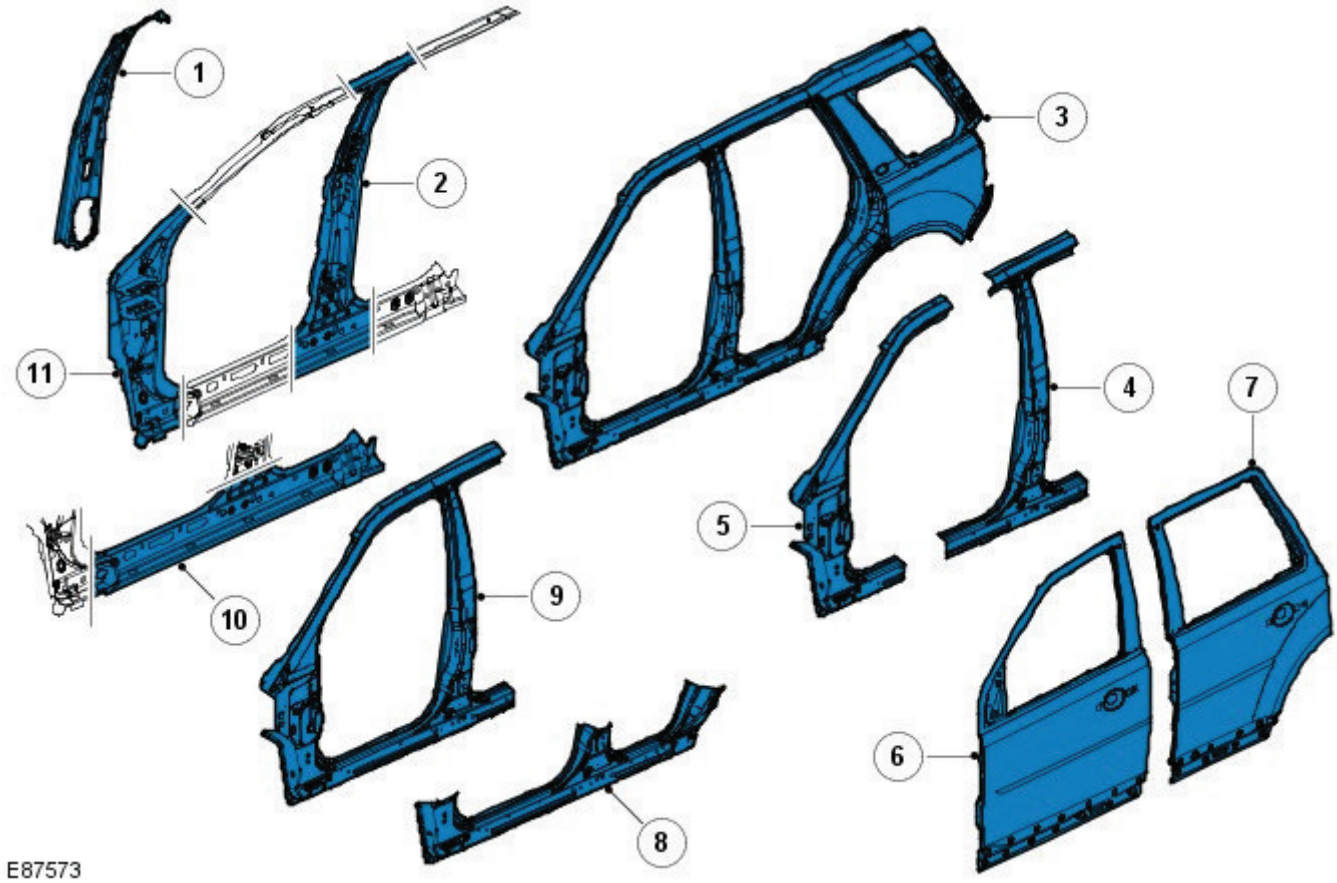

Item	Description
1	B-Pillar inner panel
2	B-Pillar reinforcement
3	Side panel
4	B-Pillar outer panel
5	A-Pillar outer panel
6	Front door
7	Rear door
8	Rocker panel
9	Side panel front section
10	Rocker panel inner reinforcement
11	A-Pillar reinforcement

paragraph

Time schedules, side panels

The following schedules show the total time taken to replace single panels and also combinations of panels. The published times include the removal of Mechanical, Electrical and Trim, (MET), items, plus paint times based on Metallic Clear Over Base Paint, (blends to adjacent panels are not included). A corrosion protection time is included where appropriate.

The times were generated by Thatcham, (the Motor Insurance Repair Research Centre), and are to be used as a guide only, based on new undamaged panels. Job allowances are not included, as a guide Thatcham recommend 0.3 hours to be added to single panel times and 0.5 hours to be added to combination times.

Single panel times

Panel Description	Times
Front fender	**5.5**
Door front	**6.9**
Door rear	**6.6**
Rocker panel	**L/H 22.8** **R/H 22.7**
Quarter panel	**L/H 22.9** **R/H 24.1**
Instrument panel remove and install	**6.2**
Headliner remove and install	**3.3**
Windshield glass remove and install	**1.9**

Combination panel replacement times

Combination panel times

Panel Description	Times
Door front	
Front fender	
Total Time	**L/H 8.9** **R/H 8.9**

Combination panel times

Panel Description	Times
Door rear	
Quarter panel	
Headliner remove and install	
Total Time	**L/H 27.0** **R/H 28.3**

Combination panel times

Panel Description	Times
Door front	
Door rear	
B-Pillar outer panel	
B-Pillar reinforcement	
B-Pillar inner panel	
Headliner remove and install	
Total Time	**L/H 39.0** **R/H 39.2**

Combination panel times

Panel Description	Times
Door front	
Door rear	
Front fender	
Quarter panel	
Headliner remove and install	
Total Time	**L/H 32.2** **R/H 33.5**

Combination panel times

Panel Description	Times
Door front	
Front fender	
A-Pillar outer panel	
A-Pillar reinforcement	
Instrument panel remove and Install	
Headliner remove and Install	
Windshield glass remove and Install	
Total Time	**L/H 37.2** **R/H 37.5**

Published: 11-May-2011

Side Panel Sheet Metal Repairs - Side Panel

Removal and Installation

Removal

CAUTION: The side panel must be MIG slot brazed to its reinforcement, which contains DP600, (Dual Phase steel). **MIG plug welds / spot welds, must not be used.**

• NOTE: The side panel is serviced as a separate weld on panel, serviced less the fender mounting bracket, which is serviced separately.

• NOTE: There are NVH elements attached inside this panel, they are not serviced on the new panel. If damaged, new element/s will be required.

1. The side panel is replaced in conjunction with:

- Front bumper cover
- Front fender
- Hood
- Front door
- Rear door
- Quarter glass
- Instrument panel
- Windshield glass
- Headliner
- Rear bumper cover

2. For additional information relating to this repair procedure please see the following:
For additional information, refer to: Body and Frame (501-26 Body Repairs - Vehicle Specific Information and Tolerance Checks, Description and Operation) /
Standard Workshop Practices (100-00 General Information, Description and Operation).

3. Remove the hood.

4. Remove the front fender.

5. Remove the front door.
For additional information, refer to: Front Door (501-03 Body Closures, Removal and Installation).

6. Remove the rear door.
For additional information, refer to: Rear Door (501-03 Body Closures, Removal and Installation).

7. Remove the headliner.
For additional information, refer to: Headliner - Vehicles Without: Tilting Roof Opening Panel (501-05 Interior Trim and Ornamentation, Removal and Installation) /
Headliner - Vehicles With: Tilting Roof Opening Panel (501-05 Interior Trim and Ornamentation, Removal and Installation).

8. Remove the instrument panel.
For additional information, refer to: Instrument Panel - TD4 2.2L Diesel (501-12 Instrument Panel and Console, Removal and Installation).

9. Remove the windshield glass.
For additional information, refer to: Windshield Glass (501-11 Glass, Frames and Mechanisms, Removal and Installation).

10. Remove the rear quarter glass.
For additional information, refer to: Rear Quarter Window Glass (501-11 Glass, Frames and Mechanisms, Removal and Installation).

11. Remove the rear bumper cover.
For additional information, refer to: Rear Bumper Cover (501-19 Bumpers, Removal and Installation).

12. Remove the upper and lower door hinges from the A-Pillar, 4 x bolts.

13. Remove the upper and lower door hinges from the B-Pillar, 4 x bolts.

14. Remove the front door striker from the B-Pillar.

15. Remove the rear door striker from the C-Pillar.

16. Remove the roof moulding, front and rear sections.

17. Remove the side air curtain module.
For additional information, refer to: Side Air Curtain Module (501-20B Supplemental Restraint System, Removal and

Installation).

18. Remove the front seat.
For additional information, refer to: Front Seat (501-10 Seating, Removal and Installation).

19. Remove the floor console.
For additional information, refer to: Floor Console (501-12 Instrument Panel and Console, Removal and Installation).

20. Remove the RH & LH rocker panel inner trims.

21. Remove the rear seat cushion.
For additional information, refer to: Rear Seat Cushion (501-10 Seating, Removal and Installation).

22. Remove the rear carpet section.

23. Remove the B-Pillar side impact sensor.
For additional information, refer to: B-Pillar Side Impact Sensor (501-20B Supplemental Restraint System, Removal and Installation).

24. Remove the front safety belt retractor.
For additional information, refer to: Front Safety Belt Retractor (501-20A Safety Belt System, Removal and Installation).

25. Remove the rear safety belt retractor.
For additional information, refer to: Rear Safety Belt Retractor (501-20A Safety Belt System, Removal and Installation).

26. Release and lay aside the front carpet section.

27. Remove the rear carpet section.

28. Remove the front wheel and tire. LINK

29. Remove the rear wheel and tire.
For additional information, refer to: Wheel and Tire (204-04 Wheels and Tires, Removal and Installation).

30. Remove the rocker panel outer moulding.

31. Remove the liftgate aperture weatherseal.

32. Remove the forced air extraction grille.

33. Release and lay aside the insulating material at the inner bulkhead.

34. Release and lay aside the insulating material at the inner quarter panel.

35. Release and lay aside the wiring harnesses at the A-Pillar, B-Pillar and rocker panel.

36. Release and lay aside the wiring harness along the inner quarter panel and back panel.

37. Release and lay aside the insulating material at the inner quarter panel.

38. RH side: Drain the fuel tank.
For additional information, refer to: Fuel Tank Draining (310-00 Fuel System - General Information, General Procedures).

39. RH side: Remove the fuel tank filler pipe.
For additional information, refer to: Fuel Tank Filler Pipe (310-01A Fuel Tank and Lines - I6 3.2L Petrol, Removal and Installation).

40. Remove the fender mounting bracket:

- Mill out 3 spot welds. If not re-using the mounting the upper spot weld does not have to be removed.
- Separate the mounting from the A-Pillar.
- Retain the mounting if it is being reused, if not, discard.

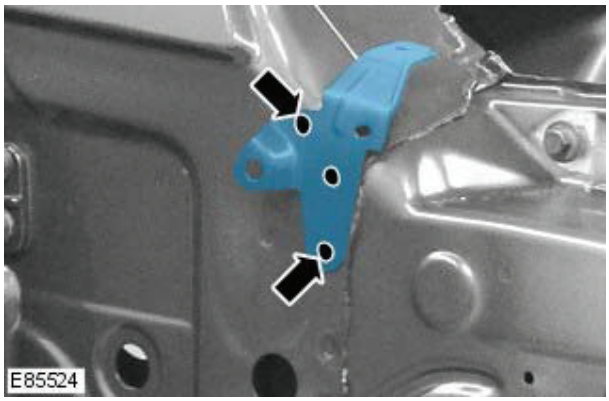

E89254

41. Saw cut the old panel at the A-Pillar and rear quarter panel, using the new panel for reference, ensuring that the new panel overlaps the panel remaining on the vehicle.

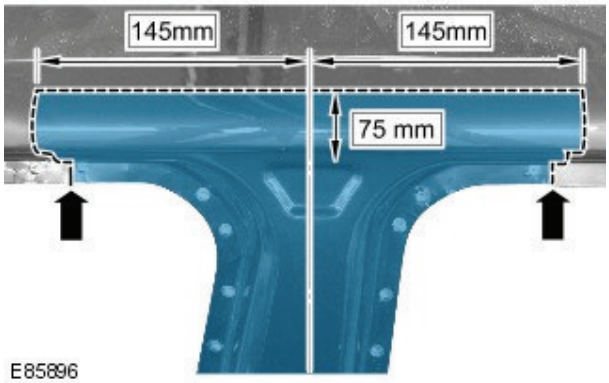

E85896

42. Saw cut the old panel at the B-Pillar, as illustrated, observe the measurements to allow access to the B-Pillar reinforcement.

43. Mill out the spot welds.

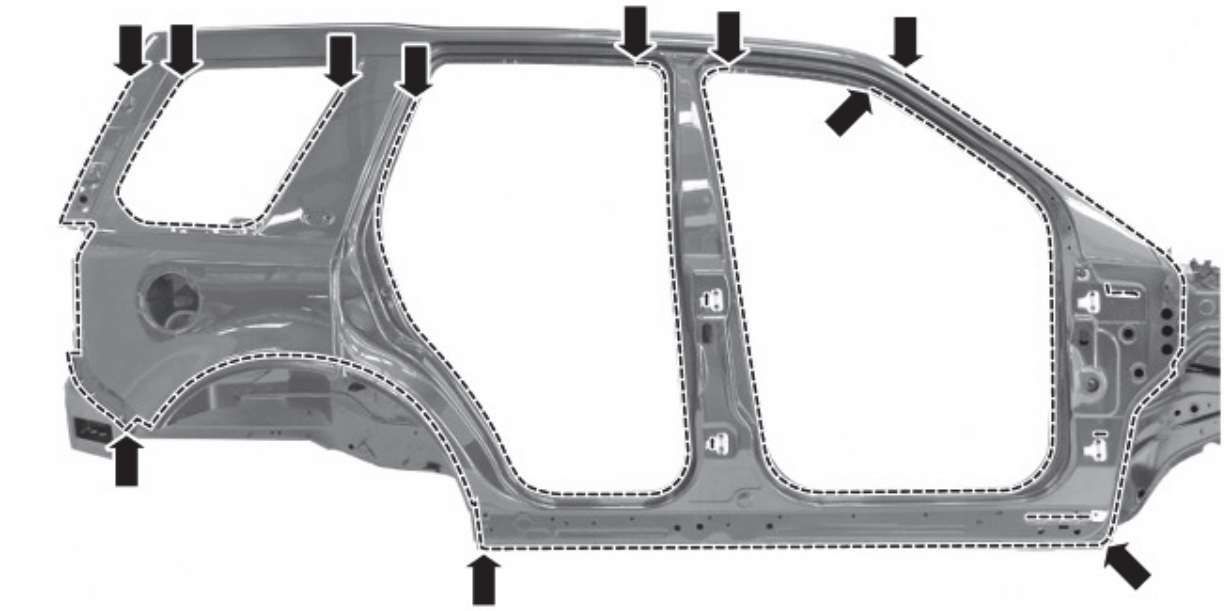

E89258

44. Separate the joints and remove the old panel, also releasing the NVH elements.

Installation

1. Offer up and align the new panel and clamp into position, overlapping the old panel remaining on the vehicle. Check alignment, if correct, proceed to next step, if not, rectify and recheck before proceeding.

E89254

2. Saw cut the new and old panels at the A-Pillar and rear quarter panel, ensuring that the new panel overlaps the panel remaining on the vehicle.

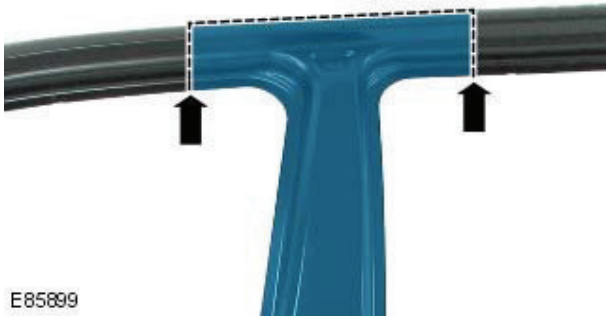

E85899

3. Saw cut through the new and old panels at the B-Pillar, where the MIG butt joint is to be made.

4. Remove the new panel and the old remnants.

5. NOTE: MIG slots should be installed in accordance with the spacing shown in the illustration. Where this is not possible, due to the indents in the panel, the slot should be made in the location of the original spot weld.

Cut slots in the new panel ready for MIG brazing.

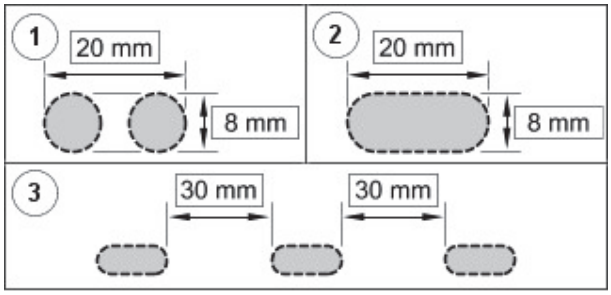

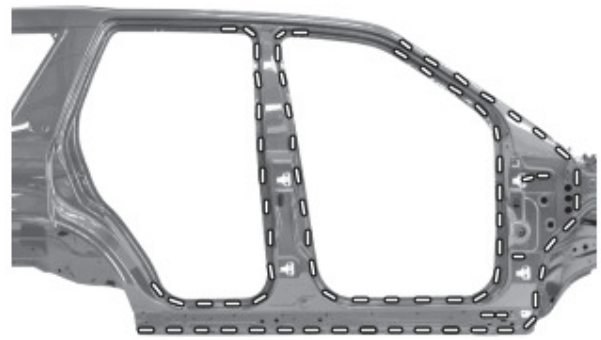

E89257

6. Drill holes in the new panel ready for MIG plug welding.

E85934

7. Prepare the old and new panel joint surfaces.

8. If necessary, renew the NVH element/s.

9. Apply sealer adhesive to the NVH element at the A-Pillar.

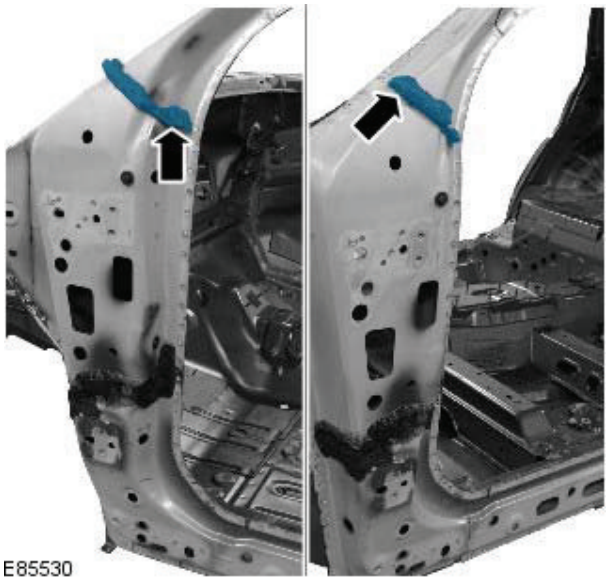

E85530

10. Apply sealer adhesive to the NVH element at the B-Pillar.

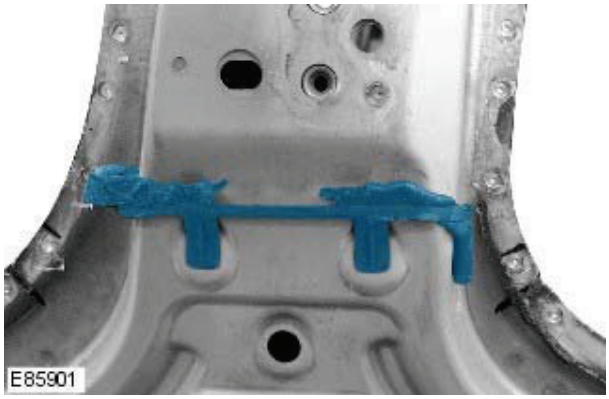

E85901

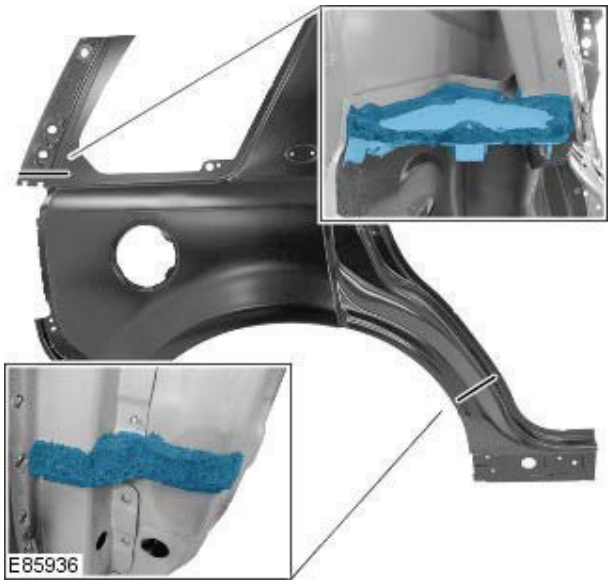

11. Apply sealer adhesive to the NVH elements at the quarter panel.

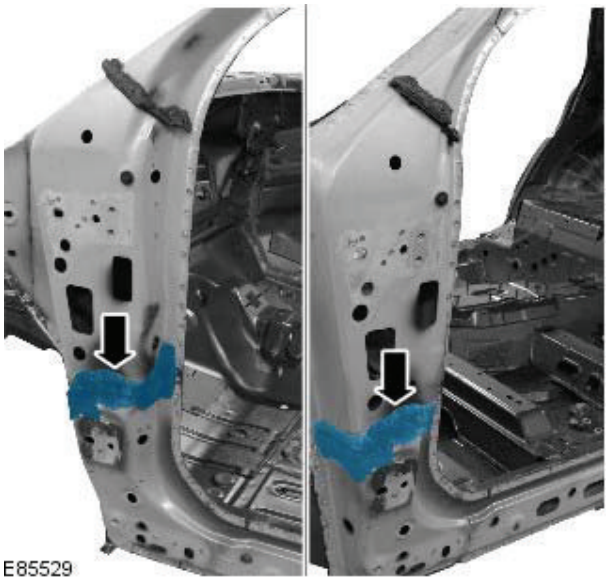

12. Apply adhesive to the A-Pillar as illustrated.

13. Apply adhesive to the quarter panel as illustrated.

14. Offer up the new panel and clamp into position.

15. Tack weld the butt joints.

16. MIG plug weld.

E85938

17. Spot weld.

E85937

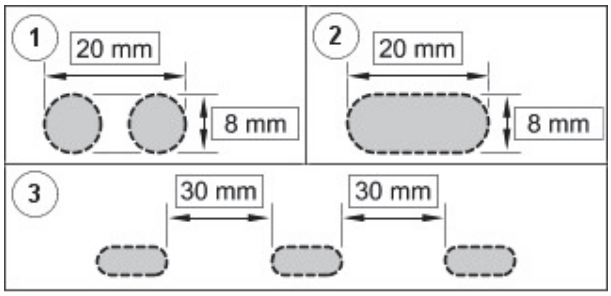

18. MIG braze the slots.

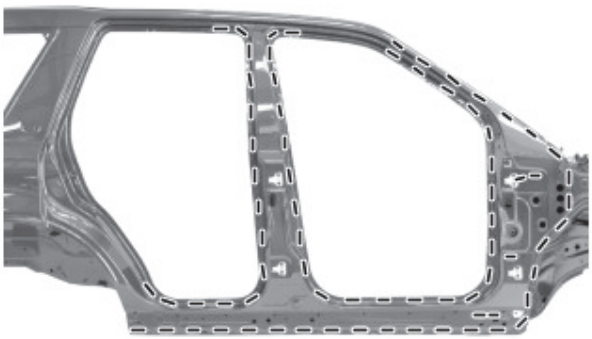

E89253

19. Dress the tack welds.

20. MIG weld the butt joint at the upper B-Pillar.

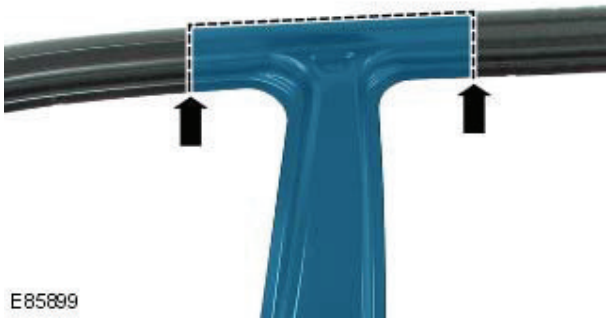

E85899

21. MIG weld the butt joints at the A-Pillar and quarter panel.

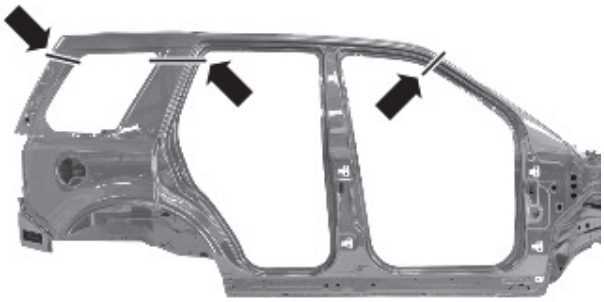

E89254

22. Dress all welded joints.

23. The installation of associated panels and mechanical components is the reverse of removal.

Published: 11-May-2011

Side Panel Sheet Metal Repairs - Side Panel Front Section

Removal and Installation

Removal

CAUTION: The side panel front section must be MIG slot brazed to its reinforcement, which contains DP600, (Dual Phase steel). **MIG plug welds / spot welds, must not be used.**

• NOTE: The side panel front section is serviced as a separate weld on panel, serviced less the fender mounting bracket, which is serviced separately.

• NOTE: There are NVH elements attached inside this panel, they are not serviced on the new panel. If damaged, new element/s will be required.

1. The side panel front section is replaced in conjunction with:

- Front bumper cover
- Front fender
- Hood
- Front door
- Rear door
- Instrument panel
- Windshield glass
- Headliner

2. For additional information relating to this repair procedure please see the following:
For additional information, refer to: Body and Frame (501-26 Body Repairs - Vehicle Specific Information and Tolerance Checks, Description and Operation) / Standard Workshop Practices (100-00 General Information, Description and Operation).

3. Remove the hood.

4. Remove the front fender.

5. Remove the front door.
For additional information, refer to: Front Door (501-03 Body Closures, Removal and Installation).

6. Remove the rear door.
For additional information, refer to: Rear Door (501-03 Body Closures, Removal and Installation).

7. Remove the headliner.
For additional information, refer to: Headliner - Vehicles Without: Tilting Roof Opening Panel (501-05 Interior Trim and Ornamentation, Removal and Installation) / Headliner - Vehicles With: Tilting Roof Opening Panel (501-05 Interior Trim and Ornamentation, Removal and Installation).

8. Remove the instrument panel.
For additional information, refer to: Instrument Panel - TD4 2.2L Diesel (501-12 Instrument Panel and Console, Removal and Installation).

9. Remove the windshield glass.
For additional information, refer to: Windshield Glass (501-11 Glass, Frames and Mechanisms, Removal and Installation).

10. Remove the upper and lower door hinges from the A-Pillar, 4 x bolts.

11. Remove the upper and lower door hinges from the B-Pillar, 4 x bolts.

12. Remove the front door striker from the B-Pillar.

13. Remove the side air curtain module.
For additional information, refer to: Side Air Curtain Module (501-20B Supplemental Restraint System, Removal and Installation).

14. Remove the rear seat cushion.
For additional information, refer to: Rear Seat Cushion (501-10 Seating, Removal and Installation).

15. Remove the RH & LH rocker panel inner trims.

16. Remove the B-Pillar side impact sensor.
For additional information, refer to: B-Pillar Side Impact Sensor

(501-20B Supplemental Restraint System, Removal and Installation).

17. Remove the front safety belt retractor.
For additional information, refer to: Front Safety Belt Retractor (501-20A Safety Belt System, Removal and Installation).

18. Release and lay aside the front carpet section.

19. Remove the rear carpet section.

20. Remove the roof moulding, front and rear sections.

21. Remove the front wheel and tire.
For additional information, refer to: Wheel and Tire (204-04 Wheels and Tires, Removal and Installation).

22. Remove the rocker panel outer moulding.

23. Release and lay aside the insulating material at the inner bulkhead.

24. Release and lay aside the wiring harnesses at the A-Pillar, B-Pillar and rocker panel.

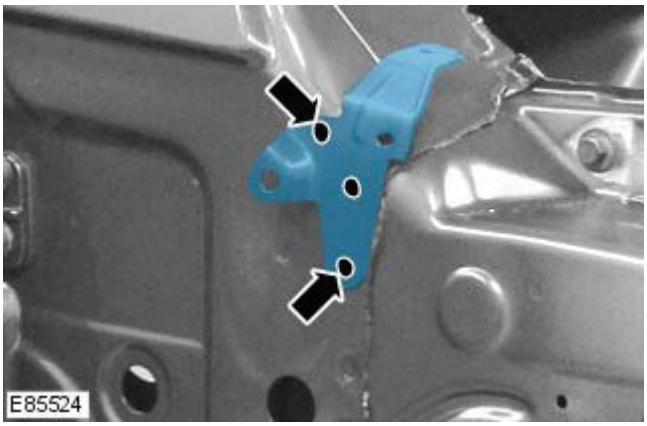

25. Remove the fender mounting bracket:

- Mill out 3 spot welds. If not re-using the mounting the upper spot weld does not have to be removed.
- Separate the mounting from the A-Pillar.
- Retain the mounting if it is being reused, if not, discard.

26. Saw cut the old panel at the A-Pillar and rocker panel, using the new panel for reference, ensuring that the new panel overlaps the panel remaining on the vehicle.

E89260

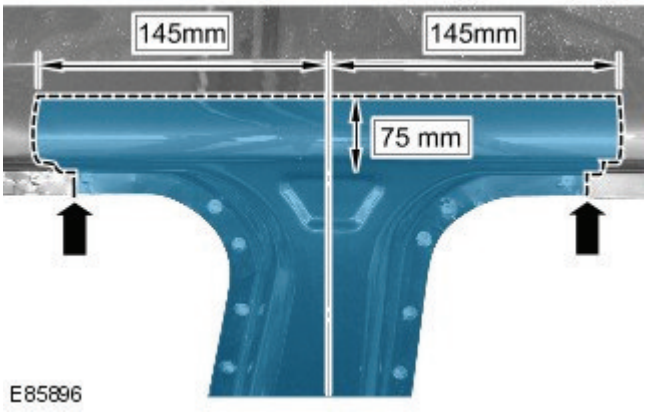

27. Saw cut the old panel at the B-Pillar, as illustrated, observe the measurements to allow access to the B-Pillar reinforcement.

28. Mill out the spot welds.

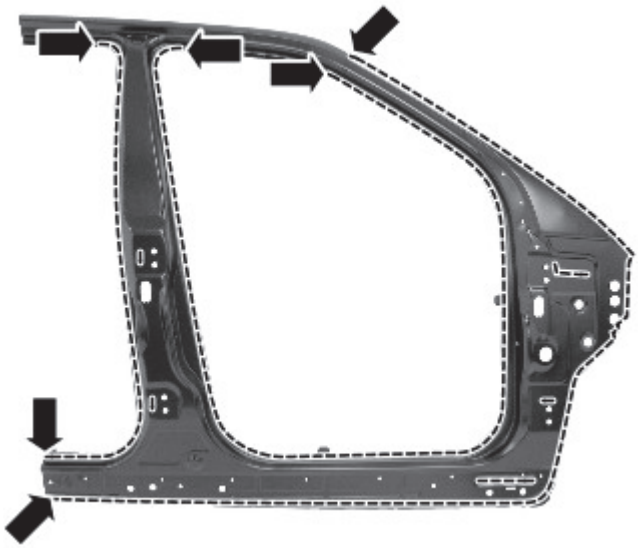

29. Separate the joints and remove the old panel, also releasing the NVH elements.

Installation

1. Offer up and align the new panel and clamp into position, overlapping the old panel remaining on the vehicle. Check alignment, if correct, proceed to next step, if not, rectify and recheck before proceeding.

2. Saw cut through the new and old panels at the rocker panel and A-Pillar, where the MIG butt joints are to be made.

3. Saw cut through the new and old panels at the B-Pillar, where the MIG butt joint is to be made.

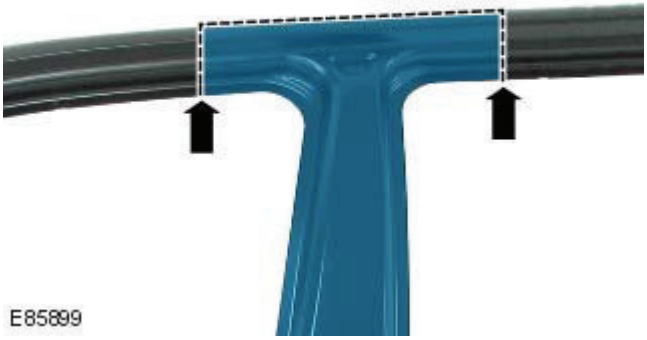

4. Remove the new panel and the old remnants.

5. NOTE: MIG slots should be installed in accordance with the spacing shown in the illustration. Where this is not possible, due to the indents in the panel, the slot should be made in the location of the original spot weld.

Cut slots in the new panel ready for MIG brazing.

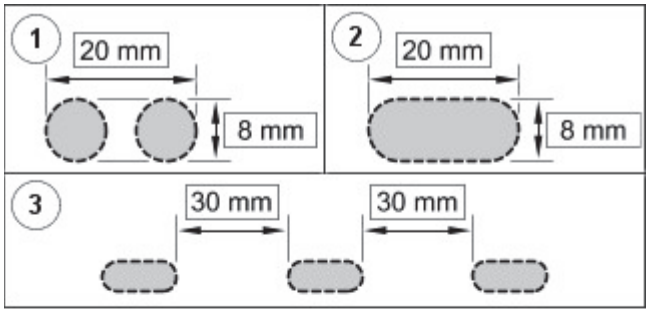

6. Prepare the old and new panel joint surfaces.

7. If necessary, renew the NVH element/s.

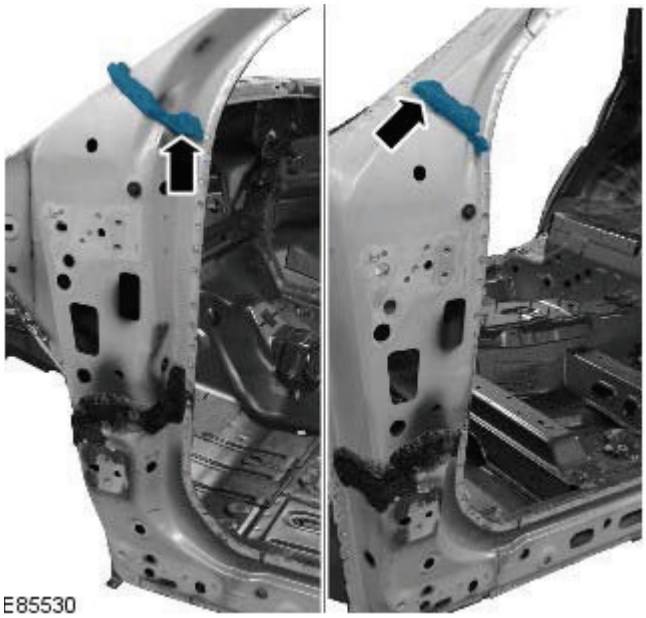

8. Apply sealer adhesive to the NVH element at the A-Pillar.

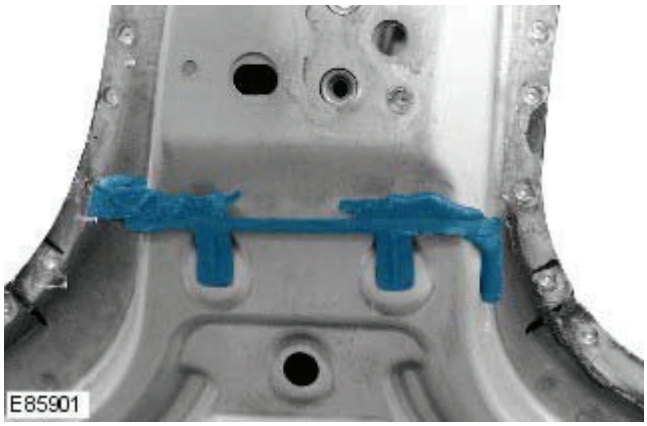

9. Apply sealer adhesive to the NVH element at the B-Pillar.

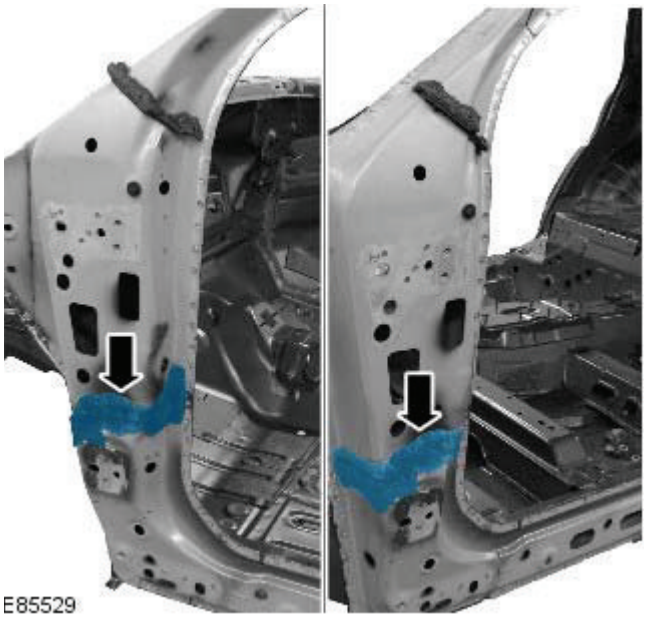

10. Apply adhesive to the A-Pillar as illustrated.

11. Offer up the new panel and clamp into position.

12. Tack weld the butt joints.

13. MIG braze the slots.

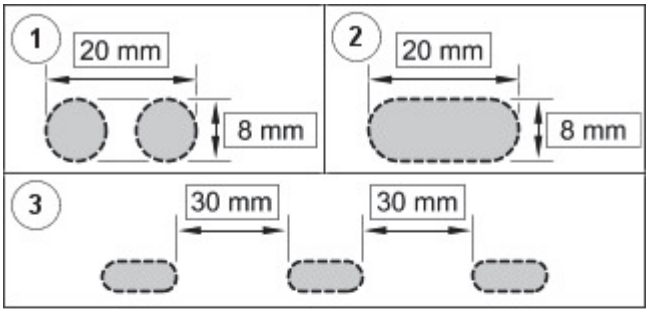

E89265

14. Dress the tack welds.

15. MIG weld the butt joint at the upper B-Pillar.

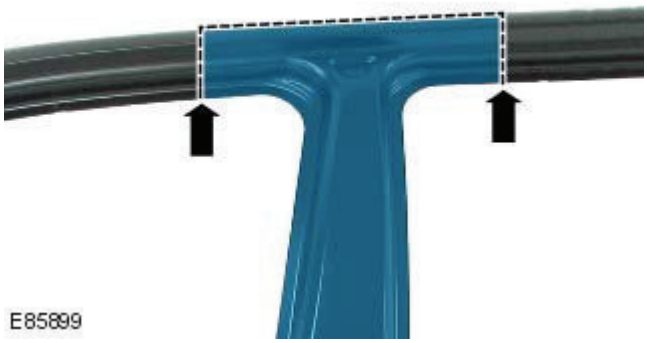

E85899

16. MIG weld the butt joints at the A-Pillar and rocker panel.

E89260

17. Dress all welded joints.

18. The installation of associated panels and mechanical components is the reverse of removal.

Published: 11-May-2011

Side Panel Sheet Metal Repairs - A-Pillar Outer Panel

Removal and Installation

Removal

CAUTION: The A-Pillar outer panel must be MIG slot brazed to the reinforcement, which is DP600, (Dual Phase steel). **MIG plug welds / spot welds, must not be used.**

• NOTE: The A-Pillar outer panel is serviced as a separate weld-on panel. The fender mounting bracket is serviced separately.

• NOTE: There are NVH elements attached inside this panel; they are not serviced on the new panel. If damaged, new element(s) will be required.

1. The A-Pillar outer panel is replaced in conjunction with:

- Front bumper cover
- Hood
- Front fender
- Front door
- Instrument panel
- Windshield glass
- Headliner

2. For additional information relating to this repair procedure please see the following:
For additional information, refer to: Body and Frame (501-26 Body Repairs - Vehicle Specific Information and Tolerance Checks, Description and Operation) / Standard Workshop Practices (100-00 General Information, Description and Operation).

3. Remove the hood.

4. Remove the front fender.

5. Remove the front door.
For additional information, refer to: Front Door (501-03 Body Closures, Removal and Installation).

6. Remove the headliner.
For additional information, refer to: Headliner - Vehicles Without: Tilting Roof Opening Panel (501-05 Interior Trim and Ornamentation, Removal and Installation) / Headliner - Vehicles With: Tilting Roof Opening Panel (501-05 Interior Trim and Ornamentation, Removal and Installation).

7. Remove the instrument panel.
For additional information, refer to: Instrument Panel - TD4 2.2L Diesel (501-12 Instrument Panel and Console, Removal and Installation).

8. Remove the windshield glass.
For additional information, refer to: Windshield Glass (501-11 Glass, Frames and Mechanisms, Removal and Installation).

9. Remove the upper and lower door hinges from the pillar, 4 x bolts.

10. Remove the rocker panel inner trim.

11. Remove the side air curtain module.
For additional information, refer to: Side Air Curtain Module (501-20B Supplemental Restraint System, Removal and Installation).

12. Remove the front wheel and tire.
For additional information, refer to: Wheel and Tire (204-04 Wheels and Tires, Removal and Installation).

13. Remove the rocker panel outer moulding.

14. Release and lay aside the front carpet section.

15. Remove the rear carpet section.

16. Remove the roof moulding, front and rear sections.

17. Release and lay aside the wiring harness along the A-Pillar inner and inner rocker panel.

18. Release and lay aside the insulating material at the inner bulkhead.

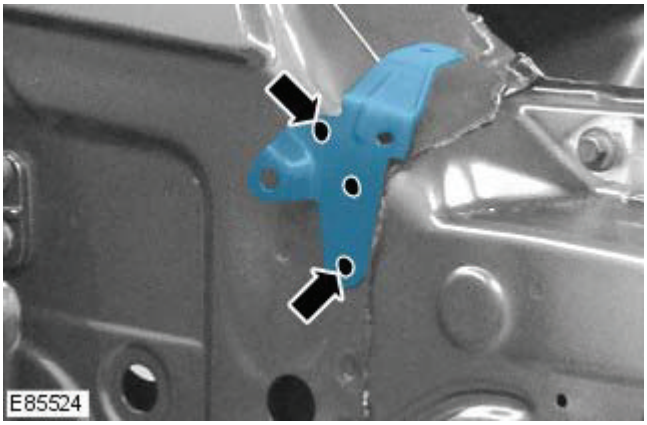

19. Remove the fender mounting bracket:

- Mill out 3 spot welds. If not re-using the mounting the upper spot weld does not have to be removed.
- Separate the mounting from the A-Pillar.
- Retain the mounting if it is being reused, if not, discard.

20. Saw cut the old panel at the points illustrated, using the new panel for reference, ensuring that the new panel overlaps the panel remaining on the vehicle.

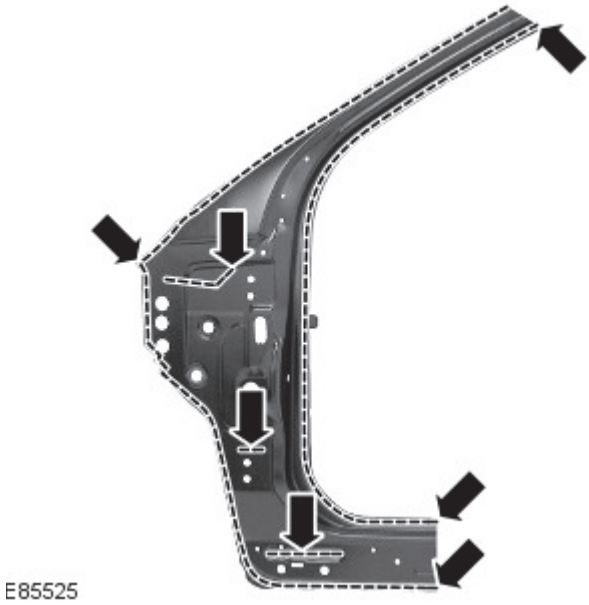

21. Mill out the spot welds.

22. Separate the joints and remove the old panel, also releasing the NVH element.

Installation

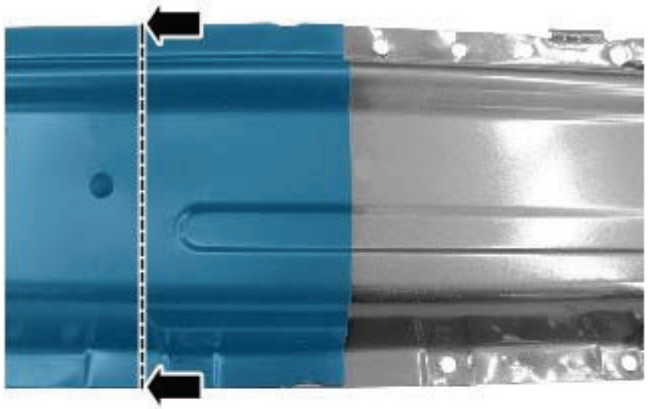

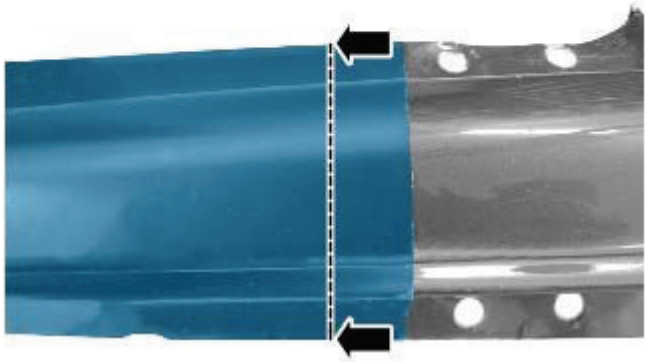

E85527

1. Offer up and align the new panel and clamp into position, overlapping the old panel remaining on the vehicle. Saw cut through the new and old panels at the points where the MIG butt joints are to be made.

2. Remove the new panel and the old remnants.
3. Prepare the old and new panel joint surfaces.
4. NOTE: MIG slots should be installed in accordance with the spacing shown in the illustration. Where this is not possible, due to the indents in the panel, the slot should be made in the location of the original spot weld.

   Cut slots in the new panel ready for MIG brazing.

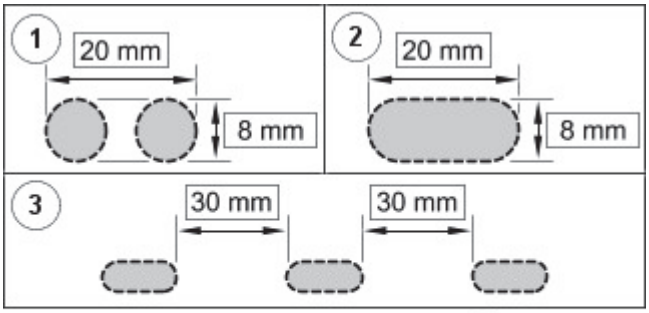

E89224

5. Offer up the new panel and clamp into position. Check alignment, if correct, proceed to next step, if not, rectify and recheck before proceeding.

6. Remove the new panel.

7. Apply adhesive to the areas illustrated.

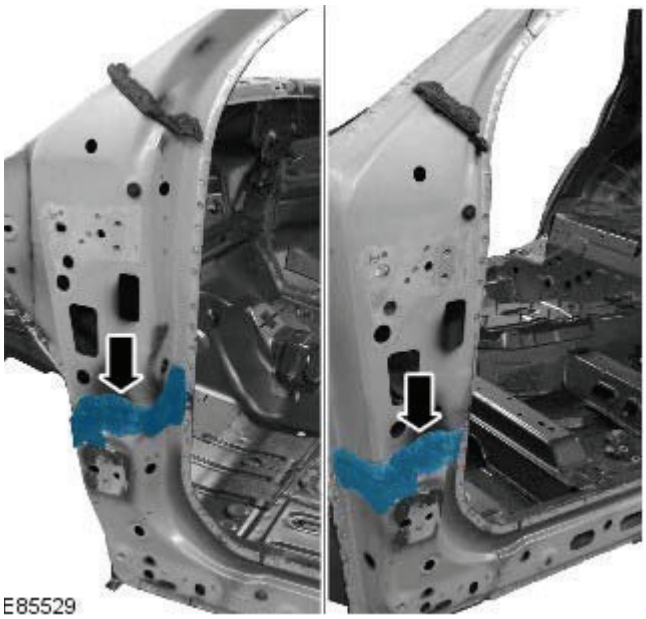

8. If necessary, renew the NVH element.

9. Apply sealer adhesive to the NVH element.

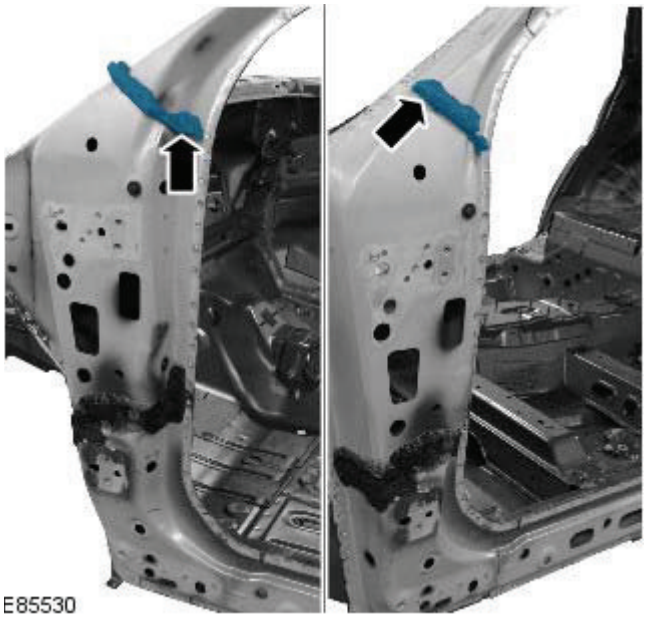

10. Offer up the new panel and clamp into position.

11. Tack weld the butt joints.

12. MIG braze the slots.

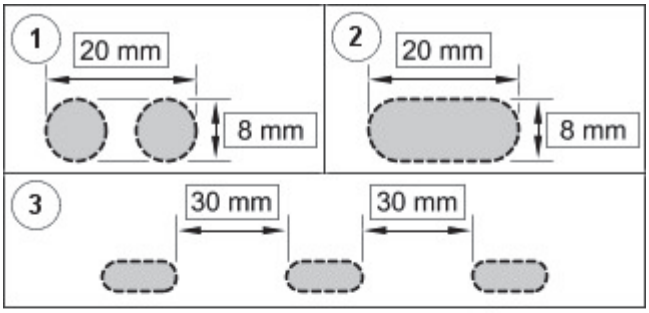

E85531

13. Dress the tack welds.

14. MIG weld the butt joint.

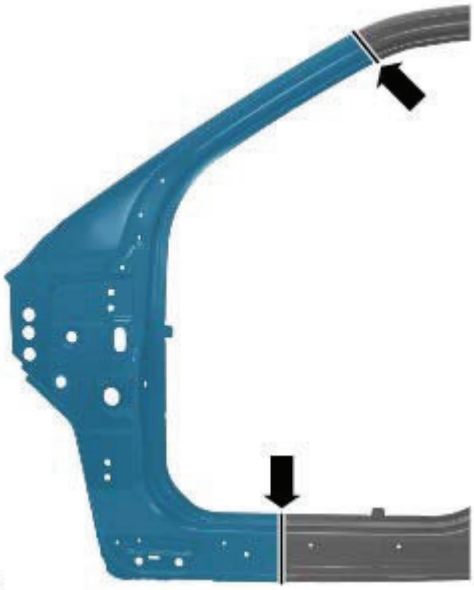

E85533

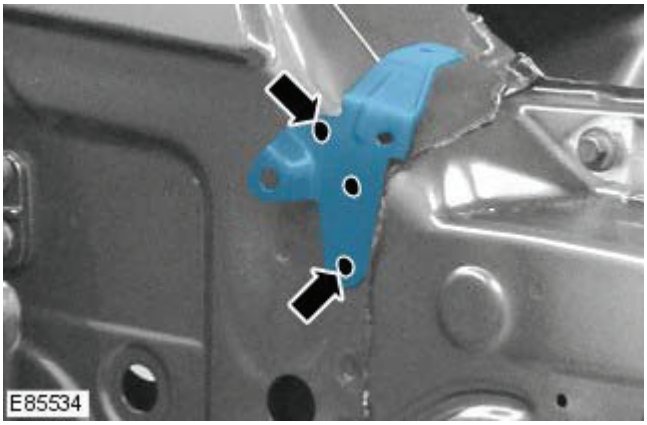

15. Install the fender mounting bracket, using the fender for alignment.

16. Dress all welded joints.

17. The installation of associated panels and mechanical components is the reverse of removal.

Published: 11-May-2011

Side Panel Sheet Metal Repairs - A-Pillar Reinforcement

Removal and Installation

Removal

• CAUTIONS:

The A-Pillar reinforcement is DP600, (Dual Phase steel) and must be MIG plug welded to the inner. **Spot welds must not be used.**

Ensure that all welded joints are suitably sealed and waterproofed, particularly in the areas where the original panel adhesive / sealer cannot be replicated. Where necessary, seal the joints prior to the fitment of outer panels.

• NOTE: The A-Pillar reinforcement is unpicked from the side panel reinforcement 'ring-frame', it is not serviced separately.

• NOTE: There are NVH elements attached inside this panel, they are not serviced on the new panel. If damaged, new element/s will be required.

1. The A-Pillar reinforcement is replaced in conjunction with:

- Front bumper cover
- Front fender
- Front door
- Instrument panel
- Windshield glass
- A-Pillar outer panel

2. For additional information relating to this repair procedure please see the following:
For additional information, refer to: Body and Frame (501-26 Body Repairs - Vehicle Specific Information and Tolerance Checks, Description and Operation) / Standard Workshop Practices (100-00 General Information, Description and Operation).

3. Remove the A-Pillar outer panel.
For additional information, refer to: A-Pillar Outer Panel (501-29 Side Panel Sheet Metal Repairs, Removal and Installation).

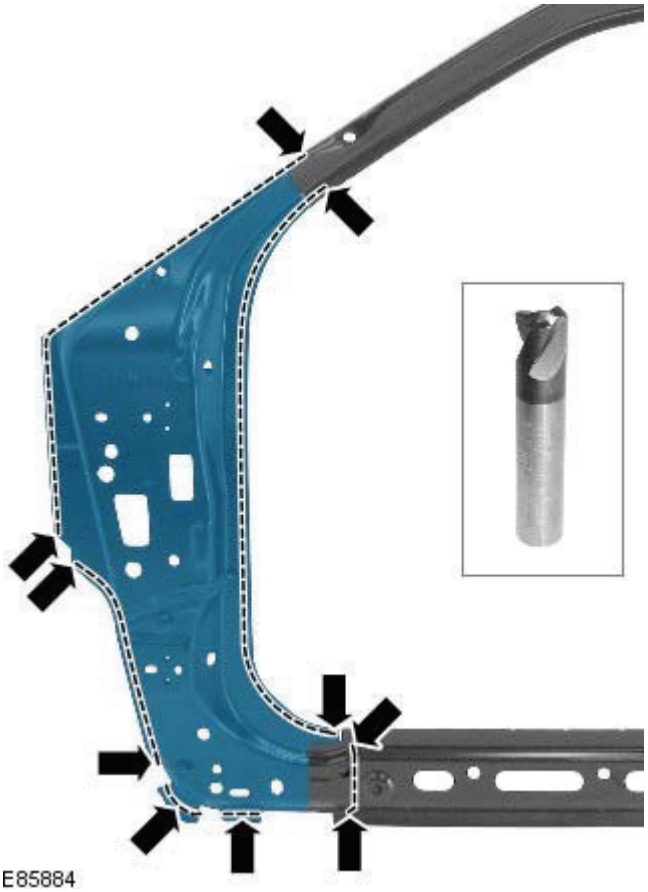

4. NOTE: Where possible, holes should be drilled through the A-Pillar reinforcement and the A-Pillar inner panel, (note that the reinforcement panel is DP600, (Dual Phase), steel and a HSS drill bit will be required). This enables MIG plug welds to be installed through the inner panel, where possible.

Mill out the spot welds, it will be necessary to use a HSS spot weld drill bit.

5. Separate the joints and remove the old panel, also releasing the NVH element.

Installation

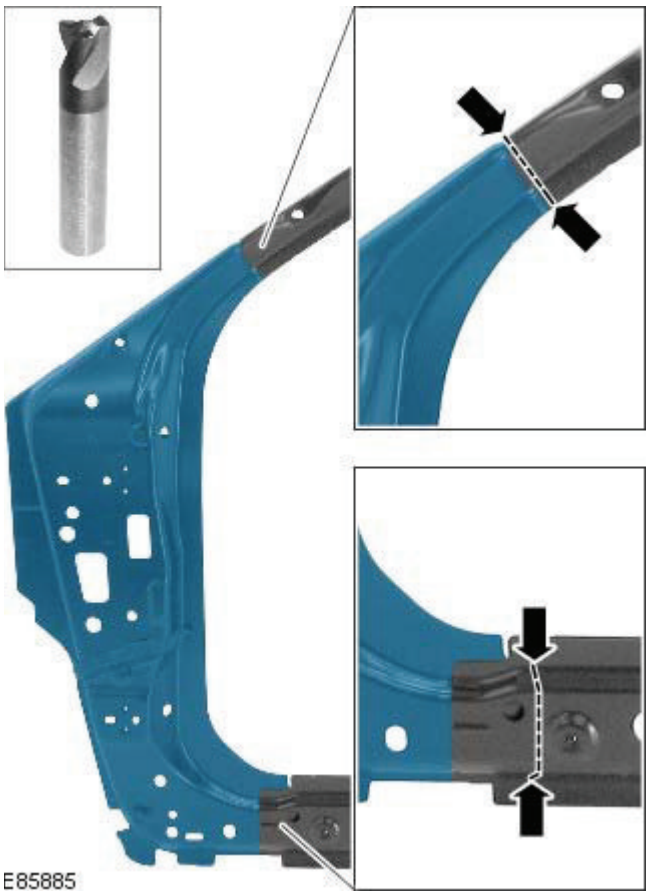

1. Remove the A-Pillar reinforcement part from the ring-frame service panel. Mill out the spot welds using a HSS spot weld drill bit.

E89228

2. Drill the holes, not already made on removal, ready for MIG plug welding.

3. Prepare the old and new panel joint surfaces.
4. Offer up the new panel and clamp into position. Check alignment, if correct, proceed to next step, if not, rectify and recheck before proceeding.
5. Remove the new panel.
6. If necessary, renew the NVH element.
7. Apply sealer adhesive to the NVH element.

E85888

8. Offer up the new panel and clamp into position.

9. NOTE: MIG plug welds should be installed in the locations of the original spot welds and where possible, should be installed through the A-Pillar inner.

MIG plug weld.

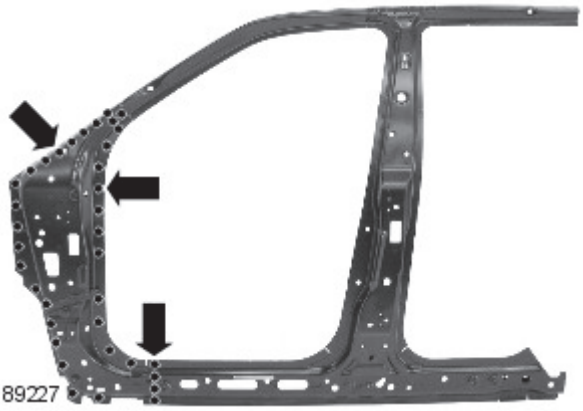

E89227

10. Dress all welded joints.

11. The installation of associated panels and mechanical components is the reverse of removal.

Published: 11-May-2011

Side Panel Sheet Metal Repairs - B-Pillar Outer Panel

Removal and Installation

Removal

CAUTION: The B-Pillar outer panel must be MIG slot brazed to the B-Pillar reinforcement, which is BH300, (Bake Hardened steel) and the rocker panel inner reinforcement, which is DP600, (Dual Phase steel). **MIG plug welds / spot welds, must not be used.**

• NOTE: The B-Pillar outer panel is serviced as a separate weld-on panel.

• NOTE: There is an NVH element attached inside this panel, it is not serviced on the new panel. If damaged, a new element will be required.

• NOTE: If the B-Pillar outer is replaced without the B-Pillar reinforcement, the upper section butt joint can be made lower down the pillar if required.

1. The B-Pillar outer panel is replaced in conjunction with:

- Front door
- Rear door
- Headliner

2. For additional information relating to this repair procedure please see the following:
For additional information, refer to: Body and Frame (501-26 Body Repairs - Vehicle Specific Information and Tolerance Checks, Description and Operation) / Standard Workshop Practices (100-00 General Information, Description and Operation).

3. Remove the front door.
For additional information, refer to: Front Door (501-03 Body Closures, Removal and Installation).

4. Remove the rear door.
For additional information, refer to: Rear Door (501-03 Body Closures, Removal and Installation).

5. Remove the upper and lower door hinges from the B-Pillar, 4 x bolts.

6. Remove the front door striker from the B-Pillar.

7. Remove the front seat.
For additional information, refer to: Front Seat (501-10 Seating, Removal and Installation).

8. Remove the rear seat cushion.
For additional information, refer to: Rear Seat Cushion (501-10 Seating, Removal and Installation).

9. Remove the front safety belt retractor.
For additional information, refer to: Front Safety Belt Retractor (501-20A Safety Belt System, Removal and Installation).

10. Remove the headliner.
For additional information, refer to: Headliner - Vehicles Without: Tilting Roof Opening Panel (501-05 Interior Trim and Ornamentation, Removal and Installation) / Headliner - Vehicles With: Tilting Roof Opening Panel (501-05 Interior Trim and Ornamentation, Removal and Installation).

11. Remove the RH & LH rocker panel inner trims.

12. Remove the B-Pillar side impact sensor.
For additional information, refer to: B-Pillar Side Impact Sensor (501-20B Supplemental Restraint System, Removal and Installation).

13. Remove the side air curtain module.
For additional information, refer to: Side Air Curtain Module (501-20B Supplemental Restraint System, Removal and Installation).

14. Remove the roof moulding, front and rear sections.

15. Remove the rocker panel outer moulding.

16. Release and lay aside the front carpet section.

17. Remove the rear carpet section.

18. Release and lay aside the wiring harness along the B-Pillar inner and inner rocker panel.

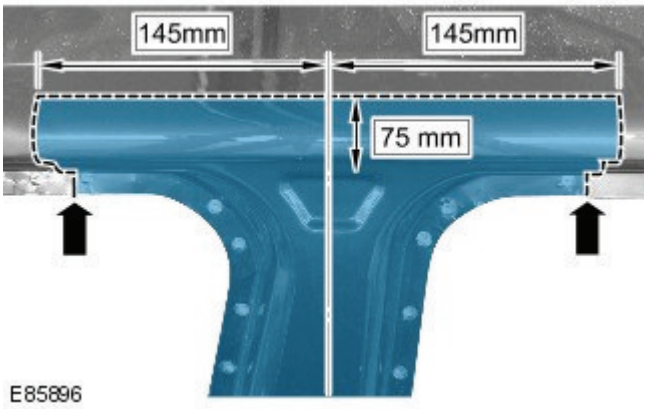

19. Saw cut the old panel as illustrated, observe the measurements to allow access to the B-Pillar reinforcement.

20. Saw cut the old panel at its joints with the rocker panel, ensuring there is an allowance for the new panel to overlap, use the new panel for reference.

21. Mill out the spot welds.

22. Separate the joints and remove the old panel, also releasing the NVH element.

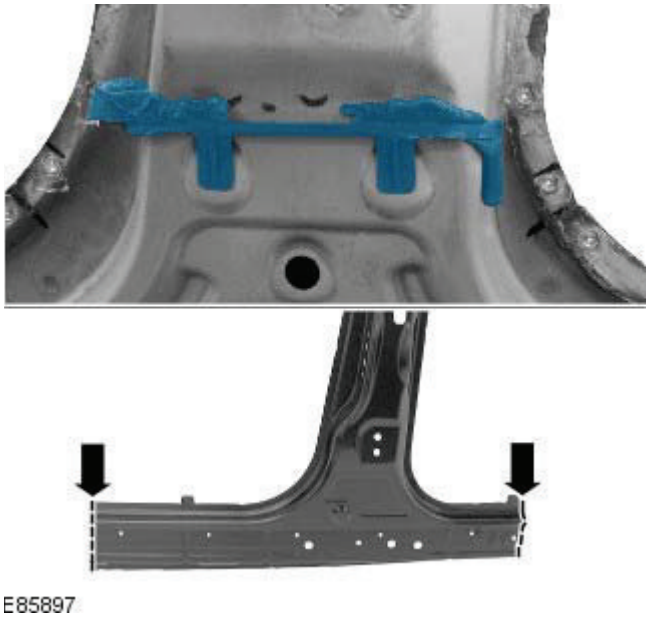

Installation

1. Offer up and align the new panel and clamp into position, overlapping the old panel remaining on the vehicle.

2. Saw cut through the new and old panels at the rocker panel, where the MIG butt joints are to be made.

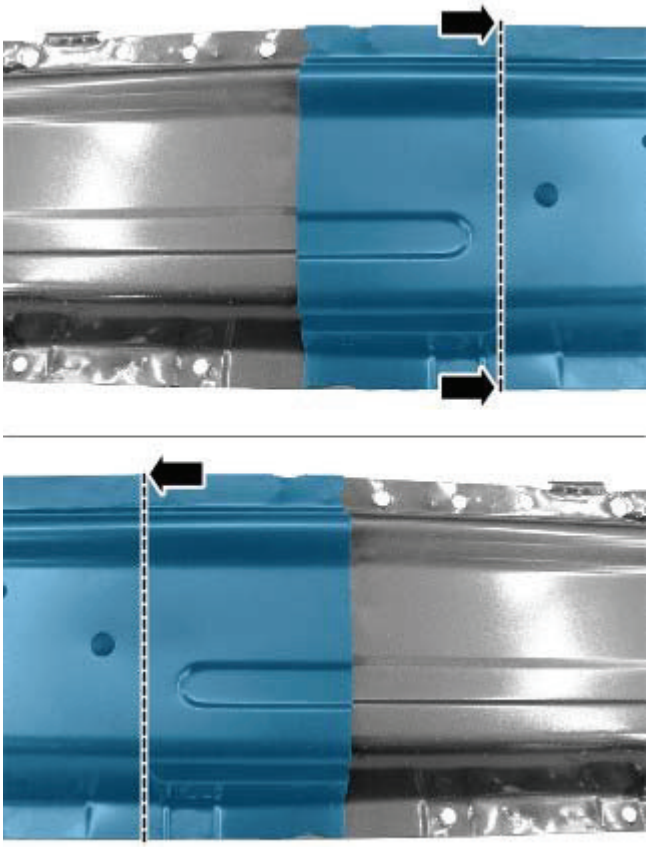

E85898

3. Saw cut through the new and old panels at the upper joint, where the MIG butt joint is to be made.

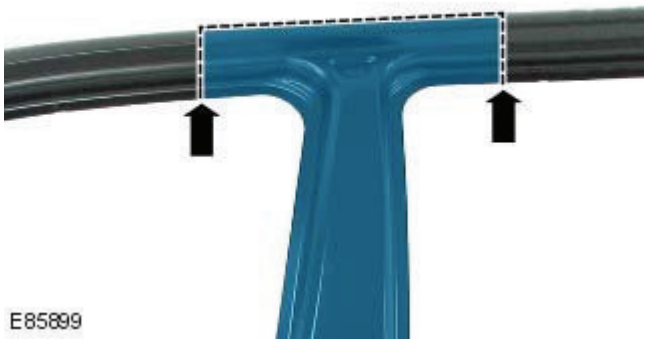

E85899

4. Remove the new panel and the old remnants.

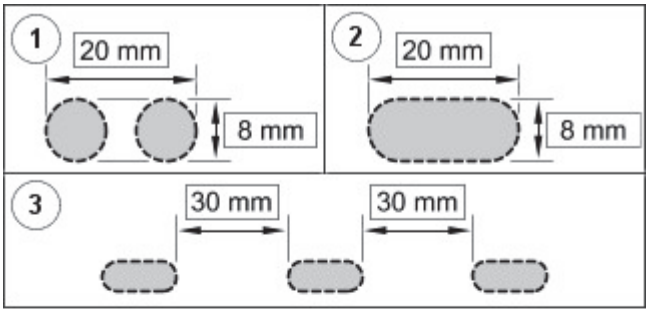

5. NOTE: MIG slots should be installed in accordance with the spacing shown in the illustration. Where this is not possible, due to the indents in the panel, the slot should be made in the location of the original spot weld.

Cut slots in the new panel ready for MIG brazing.

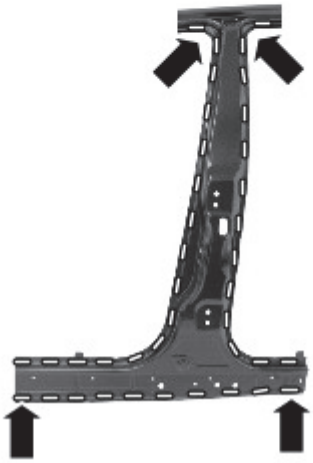

E89230

6. Prepare the old and new panel joint surfaces.

7. If necessary, renew the NVH element.

8. Apply sealer adhesive to the NVH element.

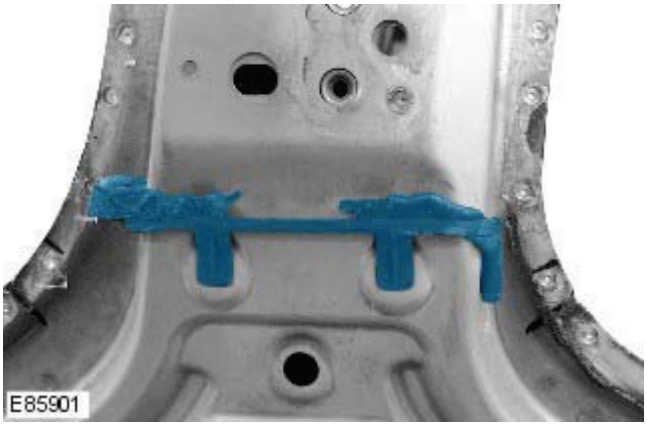

E85901

9. Offer up the new panel and clamp into position. Check alignment, if correct, proceed to next step, if not, rectify and recheck before proceeding.

10. Tack weld the butt joints.

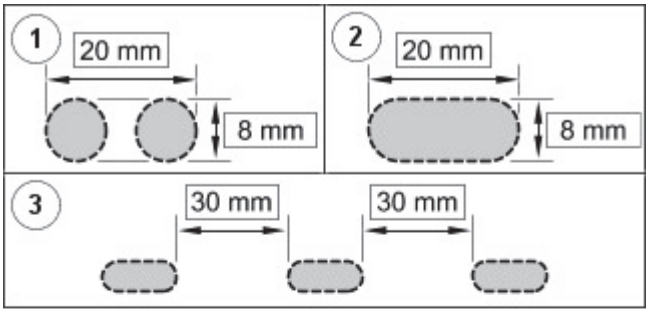

11. MIG braze the slots.

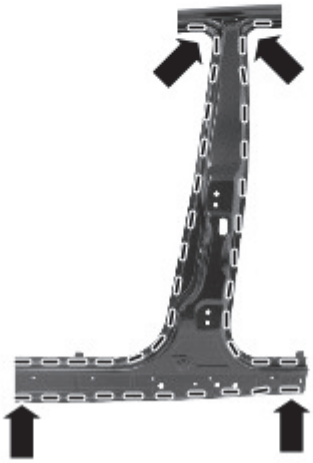

E89229

12. Dress the tack welds.

13. MIG weld the butt joints.

E85903

14. Dress all welded joints.

15. The installation of associated panels and mechanical components is the reverse of removal.

Published: 11-May-2011

Side Panel Sheet Metal Repairs - B-Pillar Reinforcement

Removal and Installation

Removal

• CAUTIONS:

The B-Pillar reinforcement is BH300, (Bake Hardened steel). It must be MIG plug welded to the B-Pillar inner, the rocker panel inner reinforcement and the cantrail reinforcement. **Spot welds must not be used.**

Ensure that all welded joints are suitably sealed and waterproofed, particularly in the areas where the original panel adhesive / sealer cannot be replicated. Where necessary, seal the joints prior to the fitment of outer panels.

• NOTE: The B-Pillar reinforcement is unpicked from the side panel reinforcement, 'ring-frame', it is not serviced separately.

• NOTE: There is a NVH element located between the B-Pillar reinforcement and the B-Pillar inner.

1. The B-Pillar reinforcement is replaced in conjunction with:

- Front door
- Rear door
- Headlining
- B-Pillar outer panel

2. For additional information relating to this repair procedure please see the following:
For additional information, refer to: Body and Frame (501-26 Body Repairs - Vehicle Specific Information and Tolerance Checks, Description and Operation) / Standard Workshop Practices (100-00 General Information, Description and Operation).

3. Remove the B-Pillar outer panel.
For additional information, refer to: B-Pillar Outer Panel (501-29 Side Panel Sheet Metal Repairs, Removal and Installation).

4. NOTE: It will be necessary to use a HSS spot weld drill bit on the A-Pillar upper / cantrail and rocker panel areas.

• NOTE: Holes should be drilled through the B-Pillar reinforcement and the B-Pillar inner panel at the door apertures. This enables MIG plug welds to be installed through the inner panel.

Mill out the spot welds.

E85905

5. Separate the joints and remove the old panel, also releasing the NVH element.

Installation

1. Remove the B-Pillar reinforcement part from the ring frame service panel. Mill out the spot welds using a HSS spot weld drill bit.

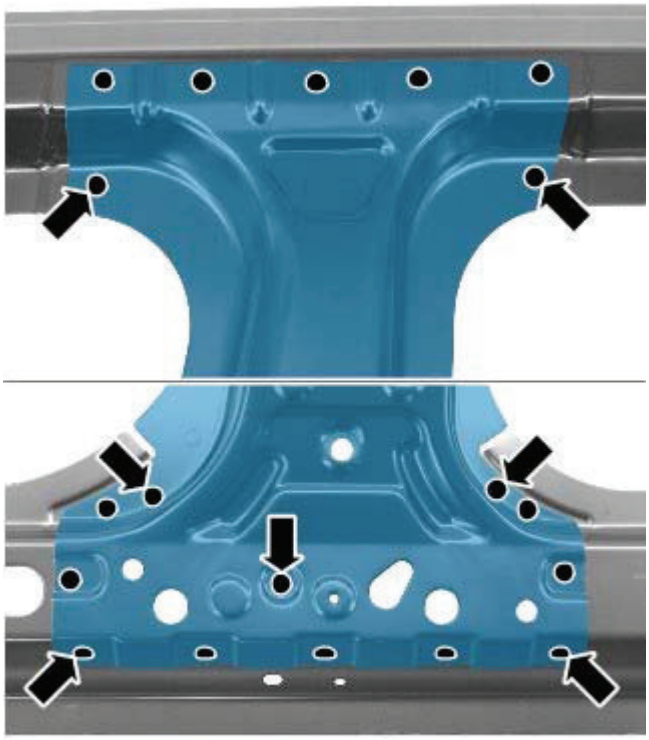

E85906

2. Prepare the old and new panel joint surfaces.
3. Offer up the new panel and clamp into position. Check alignment, if correct, proceed to next step, if not, rectify and recheck before proceeding.
4. Remove the new panel.
5. If necessary, renew the NVH element.
6. Apply sealer adhesive to the NVH element.

E85909

7. Offer up the new panel and clamp into position.

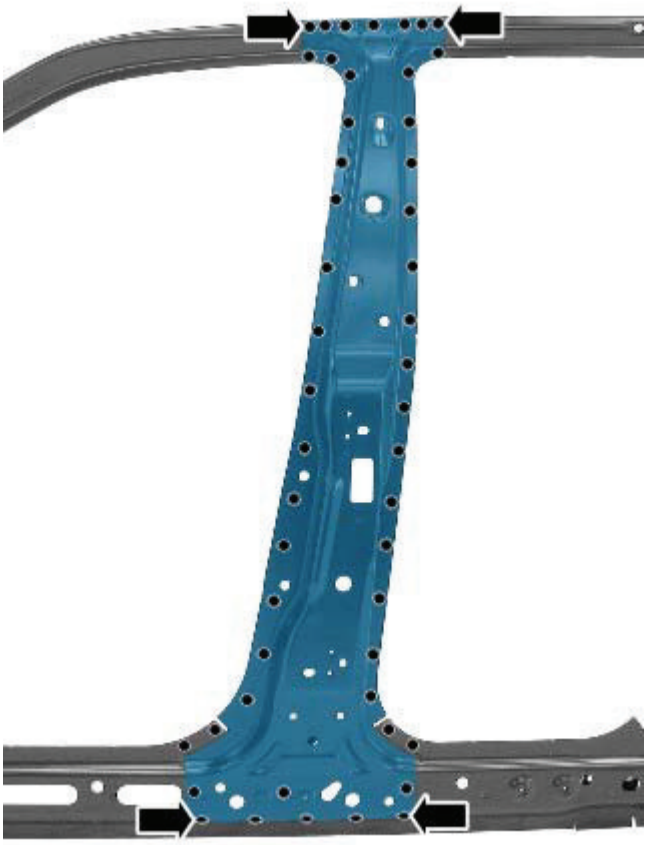

E89232

8. NOTE: Holes for MIG plugs would be created during the old panel removal and separation of the service panel.

• NOTE: MIG plug welds should be installed through the inner panel at the door apertures.

MIG plug weld.

9. Dress all welded joints.

10. The installation of associated panels and mechanical components is the reverse of removal.

Published: 11-May-2011

Side Panel Sheet Metal Repairs - B-Pillar Inner Panel

Removal and Installation

Removal

• NOTE: The B-Pillar inner panel is serviced as a separate weld-on panel.

1. The B-Pillar reinforcement is replaced in conjunction with:

- Front door
- Rear door
- Headlining
- B-Pillar outer panel
- B-Pillar reinforcement

2. For additional information relating to this repair procedure please see the following:
For additional information, refer to: Body and Frame (501-26 Body Repairs - Vehicle Specific Information and Tolerance Checks, Description and Operation) / Standard Workshop Practices (100-00 General Information, Description and Operation).

3. Remove the B-Pillar reinforcement.
For additional information, refer to: B-Pillar Reinforcement (501-29 Side Panel Sheet Metal Repairs, Removal and Installation).

4. Mill out the spot welds.

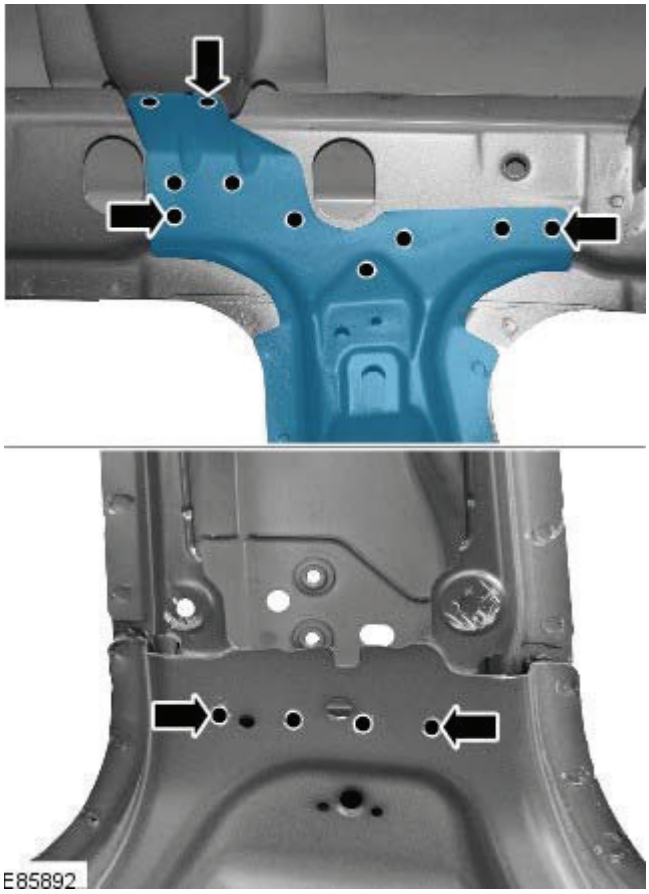

5. Separate the joints and remove the panel.

Installation

1. Prepare the old and new panel joint surfaces.

2. Drill holes in the new panel ready for MIG plug welding.

3. Offer up the new panel and clamp into position. Check alignment, if correct, proceed to next step. If not, rectify and recheck before proceeding.
4. MIG plug weld.

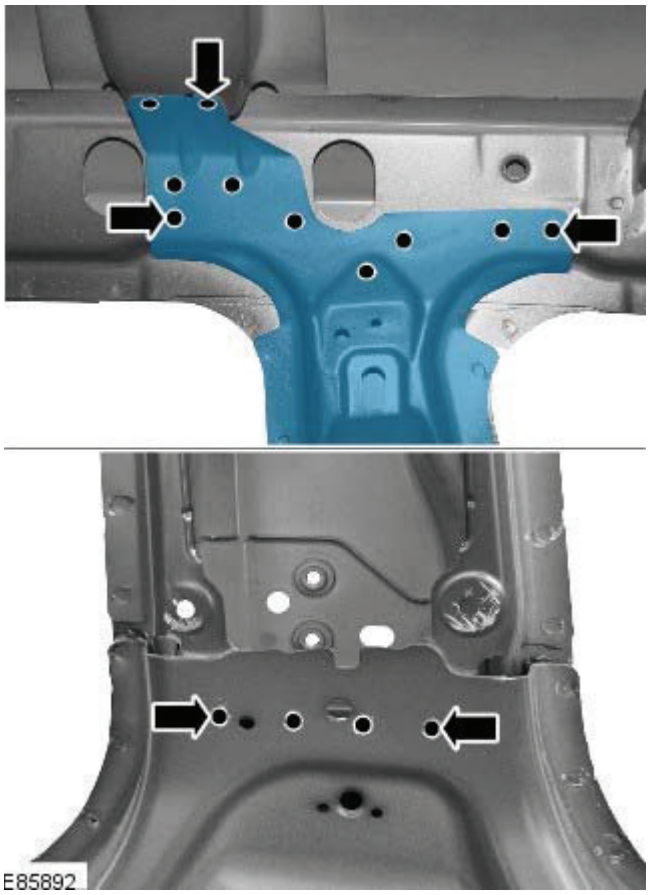

5. Dress all welded joints.
6. The installation of associated panels and mechanical components is the reverse of removal.

Published: 11-May-2011

Side Panel Sheet Metal Repairs - Rocker Panel Inner Reinforcement

Removal and Installation

Removal

• CAUTIONS:

The rocker panel inner reinforcement is DP600, (Dual Phase steel) and must be MIG plug welded to the inner. **Spot welds must not be used.**

Ensure that all welded joints are suitably sealed and waterproofed, particularly in the areas where the original panel adhesive / sealer cannot be replicated. Where necessary, seal the joints prior to the fitment of outer panels.

• NOTE: The rocker panel inner reinforcement is unpicked from the side panel reinforcement 'ring-frame', it is not serviced separately.

1. The rocker panel inner reinforcement is replaced in conjunction with:
   - Front bumper cover
   - Front fender
   - Front door
   - Rear door
   - Rocker panel
2. For additional information relating to this repair procedure please see the following:
   For additional information, refer to: Body and Frame (501-26 Body Repairs - Vehicle Specific Information and Tolerance Checks, Description and Operation) / Standard Workshop Practices (100-00 General Information, Description and Operation).
3. Remove the rocker panel.
   For additional information, refer to: Rocker Panel (501-29 Side Panel Sheet Metal Repairs, Removal and Installation).
4. Mill out the spot welds, it will be necessary to use a HSS spot weld drill bit.

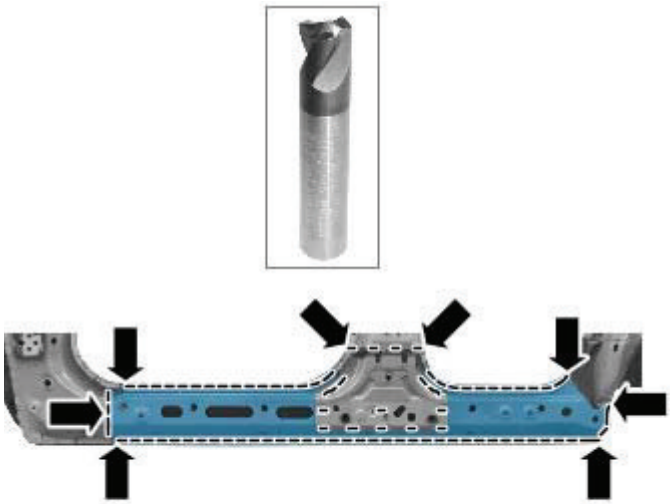

E85965

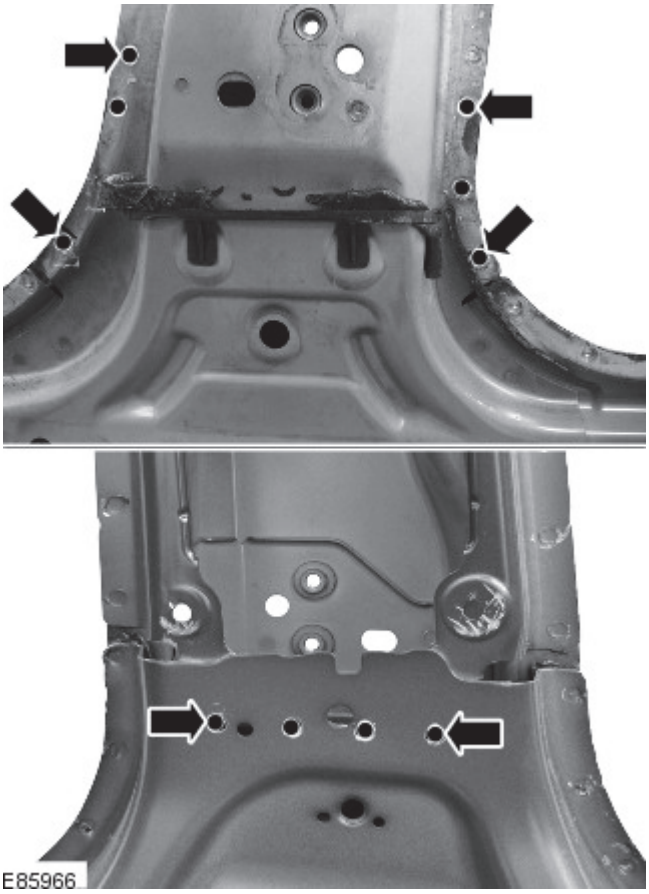

5. If the B-Pillar reinforcement has not been removed it will be necessary to release it.
   - Mill out spot welds.
   - Separate this joint and ease the B-Pillar reinforcement forward to allow the rocker panel inner reinforcement to be removed.

6. Separate the joints and remove the old panel.

Installation

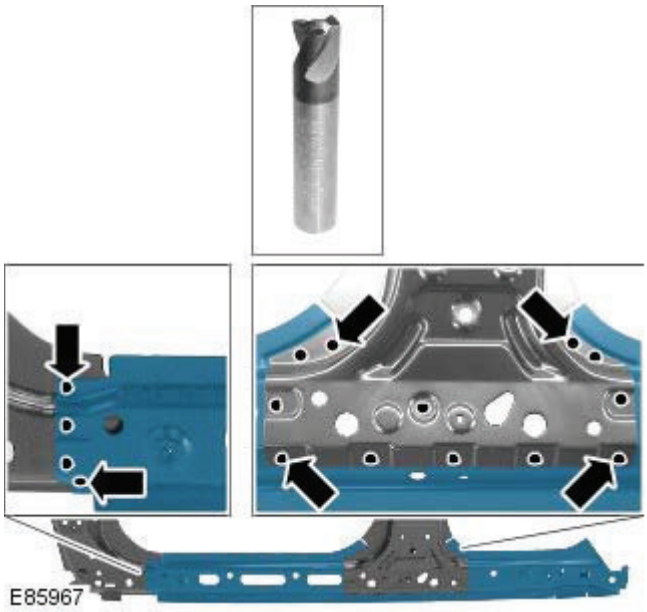

1. Remove the rocker panel reinforcement part from the side panel reinforcement 'ring-frame', service panel. Mill out the spot welds using a HSS spot weld drill bit.

2. Prepare the old and new panel joint surfaces.
3. Offer up the new panel and clamp into position. Check alignment, if correct, proceed to next step, if not, rectify and recheck before proceeding.

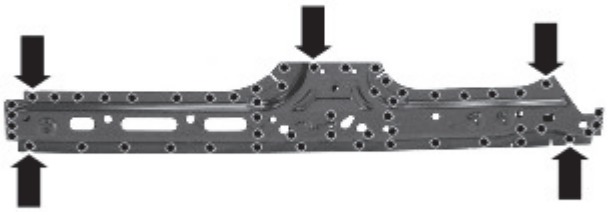

E89243

4. NOTE: Holes for MIG plugs would be created during the old panel removal and separation of the service panel.

• NOTE: MIG plug welds should be installed in the locations of the original spot welds and where possible, should be installed through the rocker panel inner.

MIG plug weld.

5. Dress all welded joints.

6. The installation of associated panels and mechanical components is the reverse of removal.

Published: 11-May-2011

Side Panel Sheet Metal Repairs - Rocker Panel

Removal and Installation

Removal

CAUTION: The rocker panel must be MIG slot brazed to the rocker panel inner reinforcement, which is DP600, (Dual Phase steel). **MIG plug welds / spot welds must not be used.**

• NOTE: The rocker panel is serviced as a separate weld-on panel.

1. The rocker panel is replaced in conjunction with:

- Front bumper cover
- Front fender
- Front door
- Rear door

2. For additional information relating to this repair procedure please see the following:
For additional information, refer to: Body and Frame (501-26 Body Repairs - Vehicle Specific Information and Tolerance Checks, Description and Operation) / Standard Workshop Practices (100-00 General Information, Description and Operation).

3. Remove the fender.

4. Remove the front door.
For additional information, refer to: Front Door (501-03 Body Closures, Removal and Installation).

5. Remove the rear door.
For additional information, refer to: Rear Door (501-03 Body Closures, Removal and Installation).

6. Remove the front road wheel.
For additional information, refer to: Wheel and Tire (204-04 Wheels and Tires, Removal and Installation).

7. Remove the rear road wheel.
For additional information, refer to: Wheel and Tire (204-04 Wheels and Tires, Removal and Installation).

8. LH side: Remove the hood release handle.

9. Remove the front seat.
For additional information, refer to: Front Seat (501-10 Seating, Removal and Installation).

10. Remove the floor console.
For additional information, refer to: Floor Console (501-12 Instrument Panel and Console, Removal and Installation).

11. Remove the front door aperture weatherseal.

12. Remove the rear door aperture weatherseal.

13. Remove the cowl side trim panel.
For additional information, refer to: Cowl Side Trim Panel (501-05 Interior Trim and Ornamentation, Removal and Installation).

14. Remove the B-Pillar upper trim.
For additional information, refer to: B-Pillar Upper Trim Panel (501-05 Interior Trim and Ornamentation, Removal and Installation).

15. Remove the RH & LH B-Pillar lower trims.
For additional information, refer to: B-Pillar Lower Trim Panel (501-05 Interior Trim and Ornamentation, Removal and Installation).

16. Remove the rear quarter trim panel.
For additional information, refer to: Rear Quarter Trim Panel (501-05 Interior Trim and Ornamentation, Removal and Installation).

17. Remove the RH & LH rocker panel inner trims.

18. Remove the rocker panel outer moulding.

19. Remove the back panel inner trim.

20. Remove the rear seat cushion.
For additional information, refer to: Rear Seat Cushion (501-10 Seating, Removal and Installation).

21. Remove the front safety belt retractor.

For additional information, refer to: Front Safety Belt Retractor (501-20A Safety Belt System, Removal and Installation).

22. Remove the rear carpet section.

23. Release and lay aside the front carpet section.

24. Remove the B-Pillar side impact sensor.
For additional information, refer to: B-Pillar Side Impact Sensor (501-20B Supplemental Restraint System, Removal and Installation).

25. Remove the C-Pillar side impact sensor.
For additional information, refer to: C-Pillar Side Impact Sensor (501-20B Supplemental Restraint System, Removal and Installation).

26. Release and lay aside the bulkhead inner insulation.

27. Release and lay aside the wiring harness along the inner rocker panel.

28. Saw cut the old panel at its joints with the A-Pillar, B-Pillar and quarter panel, ensuring there is an allowance for the new panel to overlap. Use the new panel for reference.

E85959

29. Mill out the spot welds.

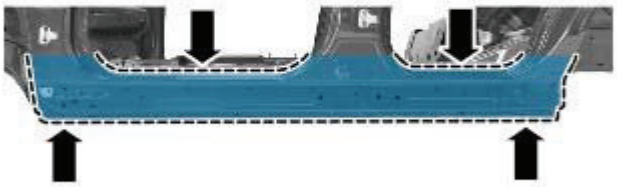

E85958

30. Separate the joints and remove the old panel.

Installation

1. Offer up and align the new panel and clamp into position, overlapping the old panel remaining on the vehicle.

2. Saw cut through the new and old panels at the A-Pillar, B-Pillar and quarter panel, where the MIG butt joints are to be made.

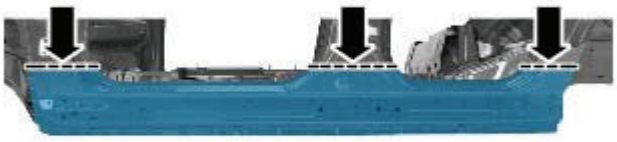

E85959

3. Remove the new panel and the old remnants.

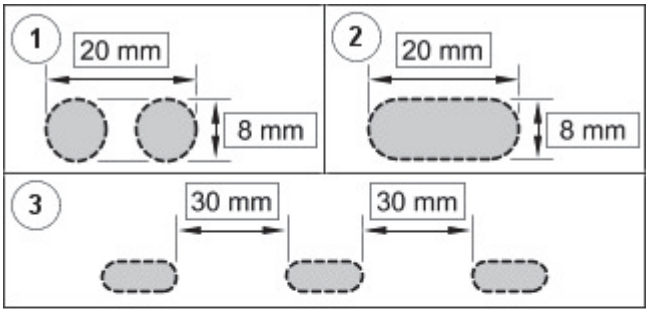

4. NOTE: MIG slots should be installed in accordance with the spacing shown in the illustration. Where this is not possible, due to the indents in the panel, the slot should be made in the location of the original spot weld.

Cut slots in the new panel ready for MIG brazing.

E89242

5. Prepare the old and new panel joint surfaces.

6. Offer up the new panel and clamp into position. Check alignment, if correct, proceed to next step, if not, rectify and recheck before proceeding.

7. Tack weld the butt joints.

8. MIG braze the slots.

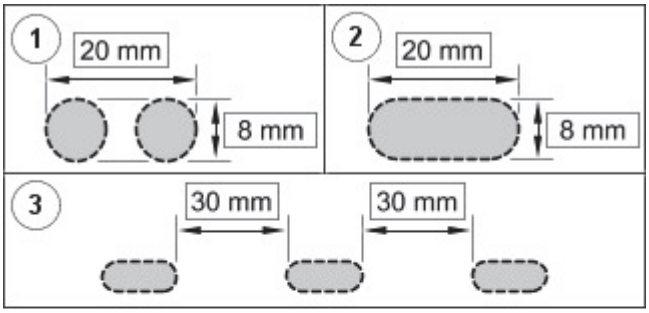

E89241

9. Dress the tack welds.

10. MIG weld the butt joints.

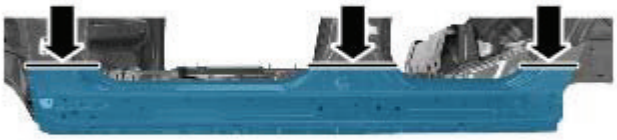

E85963

11. Dress all welded joints.

Published: 11-May-2011

Rear End Sheet Metal Repairs - Rear End Sheet Metal

Description and Operation

Rear end service panels

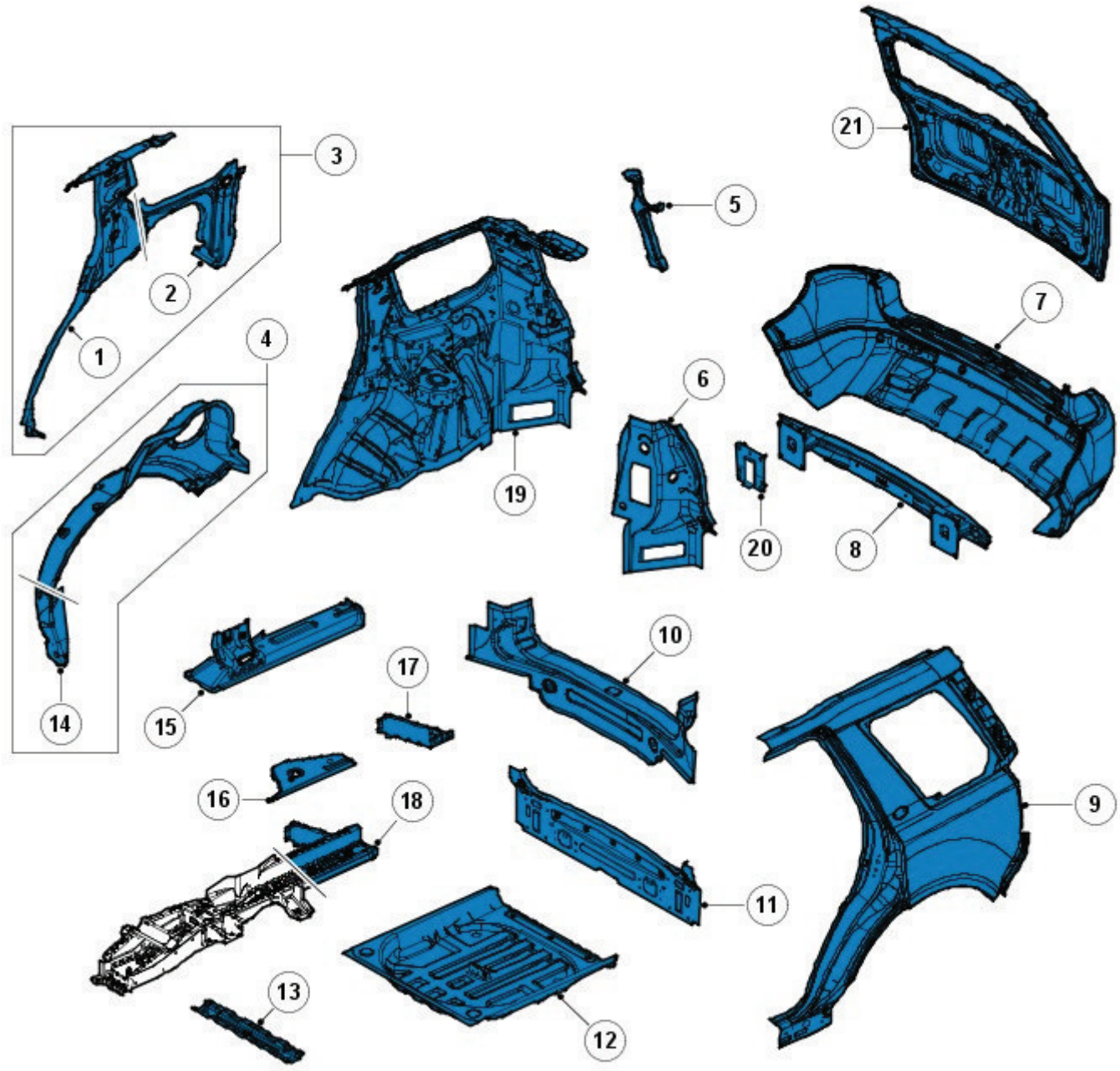

E87574

Item	Description
1	Inner quarter panel front
2	Inner quarter panel rear
3	Inner quarter panel
4	Rear wheelhouse outer
5	Water drain panel section
6	Rear lamp mounting panel
7	Rear bumper cover
8	Rear bumper
9	Quarter panel
10	Back panel assembly
11	Back panel
12	Spare wheel well
13	Rear crossmember
14	Rear wheelhouse front extension
15	Rear side member closing panel
16	Rear side member upper side extension
17	Rear side member lower side extension
18	Rear side member section

Item	Description
19	Inner quarter panel and wheelhouse
20	Rear bumper mounting
21	Liftgate

Time schedules, rear end

The following schedules show the total time taken to replace single panels and also combinations of panels. The published times include the removal of Mechanical, Electrical and Trim, (MET), items, plus paint times based on Metallic Clear Over Base Paint, (blends to adjacent panels are not included). A corrosion protection time is included where appropriate.

The times were generated by Thatcham, (the Motor Insurance Repair Research Centre), and are to be used as a guide only, based on new undamaged panels. Job allowances are not included, as a guide Thatcham recommend 0.3 hours to be added to single panel times and 0.5 hours to be added to combination times.

Single panel times

Panel Description	Times
Rear bumper cover	**5.1**
Liftgate	**6.9**
Rear lamp mounting panel	**L/H 8.5** **R/H 8.6**
Back panel	**14.6**
Quarter panel	**L/H 22.9** **R/H 24.1**
Headliner remove and install	**3.3**
Liftgate screen remove and install	**1.4**
Rear suspension assembly remove and install	**4.0**
Fuel tank remove and install	**2.5**

Combination panel replacement times

Combination panel times

Panel Description	Times
Rear bumper cover	
Rear bumper	
Liftgate	
Rear lamp mounting panel	
Back panel	
Quarter panel	
Headliner remove and install	
Liftgate screen remove and install	
Total Time	**L/H 44.3** **R/H 45.3**

Combination panel times

Panel Description	Times
Rear bumper cover	
Rear bumper	
Liftgate	
Rear lamp mounting panel L/H and R/H	
Back panel	
Inner back panel assembly	
Quarter panel L/H and R/H	
Headliner remove and install	
Liftgate screen remove and install	
Total Time	**62.5**

Combination panel times

Panel Description	Times
Rear bumper cover	
Rear bumper	
Liftgate	
Back panel	
Inner back panel assembly	
Quarter panel	
Spare wheel well	
Rear crossmember	
Rear bumper mounting	
Rear side member section	
Rear side member closing panel	
Rear side member upper side extension	
Water drain panel section	
Inner quarter panel and wheelarch	
Headliner remove and install	
Liftgate screen remove and install	
Fuel tank remove and install	
Rear suspension assembly remove and install	
Total Time	**L/H 69.6** **R/H 70.3**

Combination panel times

Panel Description	Times
Rear bumper cover	
Rear bumper	
Liftgate	
Back panel	
Inner back panel assembly	
Quarter panel L/H and R/H	
Spare wheel well	
Rear crossmember	
Rear bumper mounting L/H and R/H	
Rear side member section L/H and R/H	
Rear side member closing panel L/H and R/H	
Rear side member upper side extension L/H and R/H	
Water drain panel section L/H and R/H	
Inner quarter panel and wheelarch L/H and R/H	
Headliner remove and install	
Liftgate screen remove and install	
Fuel tank remove and install	
Rear suspension assembly remove and install	
Total Time	**95.9**

Combination panel times

Panel Description	Times
Rear bumper cover	
Rear bumper	
Liftgate	
Back panel	
Inner back panel assembly	
Rear lamp mounting panel	
Spare wheel well	
Rear bumper mounting	
Rear side member section	
Rear side member closing panel	
Rear side member upper side extension	
Liftgate screen remove and install	
Fuel tank remove and install	
Rear suspension assembly remove and install	
Total Time	**L/H 47.1** **R/H 47.1**

Combination panel times

Panel Description	Times
Rear bumper cover	
Rear bumper	
Liftgate	
Back panel	
Inner back panel assembly	
Rear lamp mounting panels L/H and R/H	
Spare wheel well	
Rear crossmember	
Rear bumper mounting L/H and R/H	
Liftgate screen remove and install	
Fuel tank remove and install	
Rear suspension assembly remove and install	
Total Time	**43.9**

Published: 11-May-2011

Rear End Sheet Metal Repairs - Quarter Panel

Removal and Installation

Removal

CAUTION: The quarter panel must be MIG slot brazed to the rocker panel inner reinforcement, which is DP600, (Dual Phase steel). **MIG plug welds / spot welds must not be used in this area.**

• NOTE: The quarter panel is serviced as a separate weld-on panel.

• NOTE: There are NVH elements inside this panel, they are not serviced on the new panel. If damaged, a new element will be required.

1. The quarter panel is replaced in conjunction with:

- Rear bumper cover
- Rear door
- Quarter glass
- Headliner

2. For additional information relating to this repair procedure please see the following:
For additional information, refer to: Body and Frame (501-26 Body Repairs - Vehicle Specific Information and Tolerance Checks, Description and Operation) / Standard Workshop Practices (100-00 General Information, Description and Operation).

3. Remove the rear bumper cover.
For additional information, refer to: Rear Bumper (501-19 Bumpers, Removal and Installation).

4. Remove the rear door.
For additional information, refer to: Rear Door (501-03 Body Closures, Removal and Installation).

5. Remove the headliner.
For additional information, refer to: Headliner - Vehicles Without: Tilting Roof Opening Panel (501-05 Interior Trim and Ornamentation, Removal and Installation) / Headliner - Vehicles With: Tilting Roof Opening Panel (501-05 Interior Trim and Ornamentation, Removal and Installation).

6. Remove the rear door striker from the C-Pillar.

7. Remove the roof moulding, front and rear sections.

8. Remove the side air curtain module.
For additional information, refer to: Side Air Curtain Module (501-20B Supplemental Restraint System, Removal and Installation).

9. Remove the rear quarter glass.
For additional information, refer to: Rear Quarter Window Glass (501-11 Glass, Frames and Mechanisms, Removal and Installation).

10. Remove the front seat.
For additional information, refer to: Front Seat (501-10 Seating, Removal and Installation).

11. Remove the floor console.
For additional information, refer to: Floor Console (501-12 Instrument Panel and Console, Removal and Installation).

12. Remove the RH & LH rocker panel inner trims.

13. Remove the rear seat cushion.
For additional information, refer to: Rear Seat Cushion (501-10 Seating, Removal and Installation).

14. Remove the rear carpet section.

15. Remove the rear safety belt retractor.
For additional information, refer to: Rear Safety Belt Retractor (501-20A Safety Belt System, Removal and Installation).

16. Remove the liftgate aperture weatherseal.

17. Remove the forced air extraction grille.

18. Remove the rear wheel and tire.
For additional information, refer to: Wheel and Tire (204-04 Wheels and Tires, Removal and Installation).

19. Remove the rocker panel outer moulding.

20. Release and lay aside the wiring harness along the inner

quarter panel and back panel.

21. Release and lay aside the insulating material at the inner quarter panel.

22. RH side: Drain the fuel tank.
For additional information, refer to: Fuel Tank Draining (310-00 Fuel System - General Information, General Procedures).

23. RH side: Remove the fuel tank filler pipe.
For additional information, refer to: Fuel Tank Filler Pipe (310-01A Fuel Tank and Lines - I6 3.2L Petrol, Removal and Installation).

24. Saw cut the old panel at the points illustrated, using the new panel for reference, ensuring that the new panel overlaps.

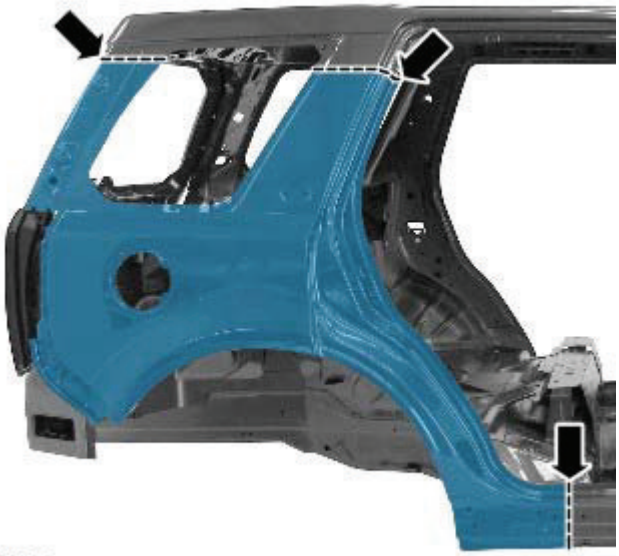

E85932

25. Mill out the spot welds.

E85931

26. Separate the joints and remove the old panel, also releasing the NVH elements and the fuel filler on the RH.

Installation

E85933

1. Offer up and align the new panel and clamp into position, overlapping the old panel. Saw cut the new and old panels at the points where the MIG butt joints are to be made.

2. Remove the new panel and the old remnants.
3. Prepare the old and new panel joint surfaces.
4. Drill holes in the new panel ready for MIG plug welding.

E85934

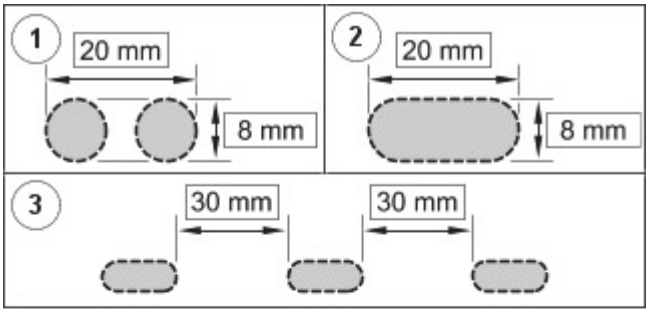

5. NOTE: MIG slots should be installed in accordance with the spacing shown in the illustration. Where this is not possible, due to the indents in the panel, the slot should be made in the location of the original spot weld.

Cut slots in the new panel ready for MIG brazing.

E89240

6. Offer up the new panel and clamp into position. Check alignment, if correct, proceed to next step, if not, rectify and recheck before proceeding.

7. Remove the new panel.

8. Apply adhesive to the areas illustrated.

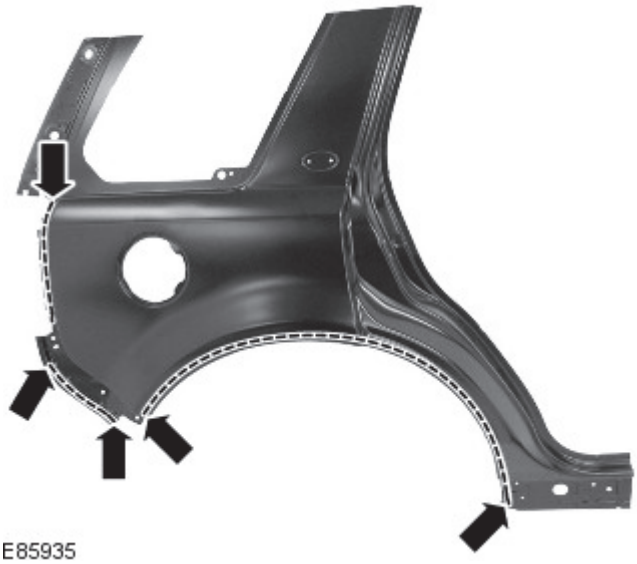

E85935

9. If necessary, renew the NVH element/s.

10. Apply sealer adhesive to the NVH elements.

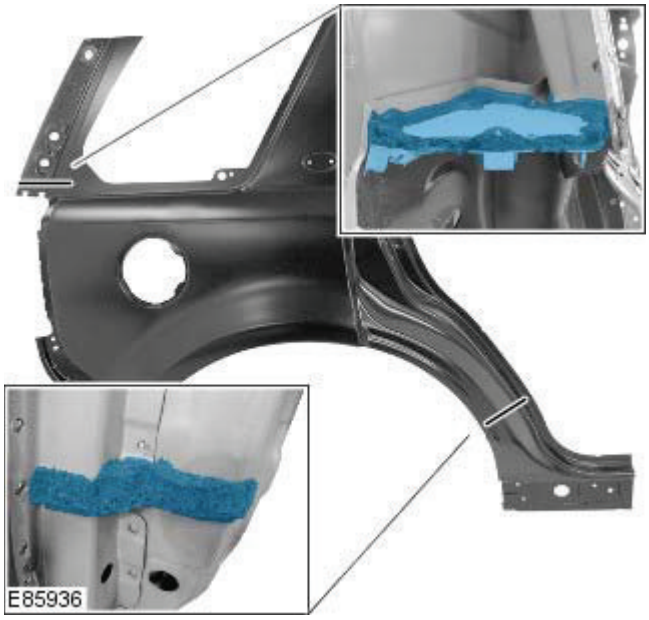

11. Offer up the new panel and clamp into position.

12. Tack weld the butt joints.

13. Spot weld.

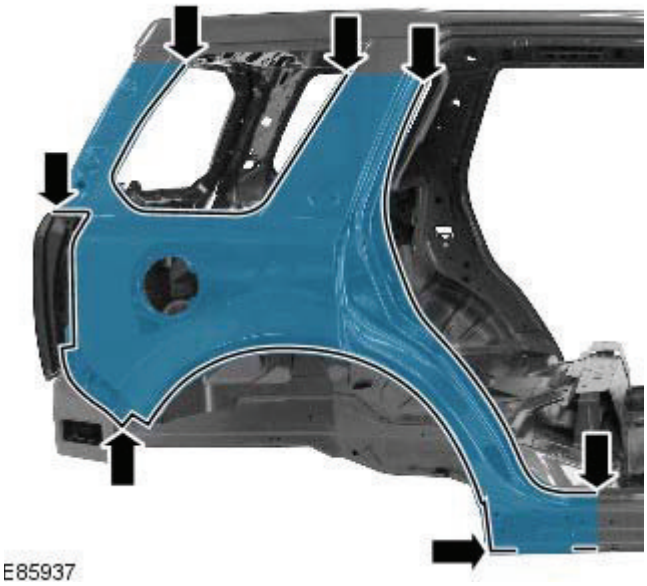

14. MIG plug weld.

15. MIG braze the slots.

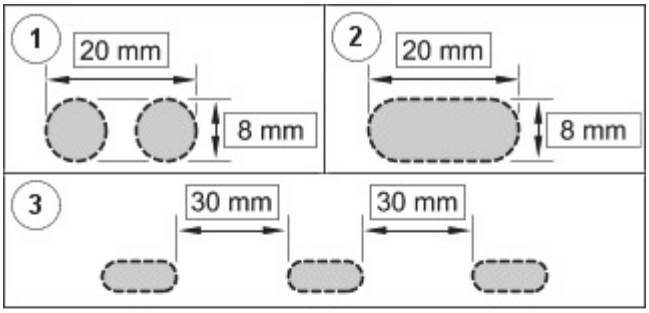

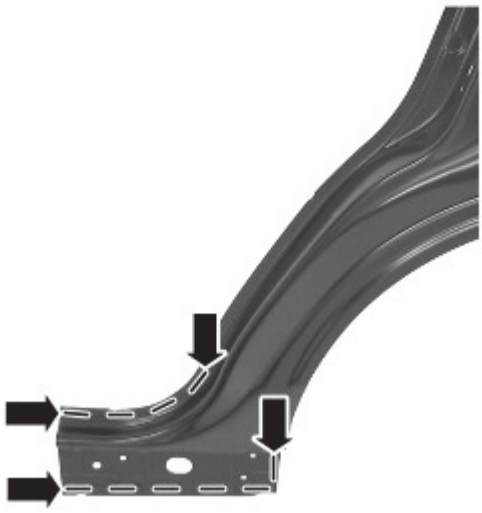

E89239

16. Dress the tack welds.

17. MIG weld the butt joint.

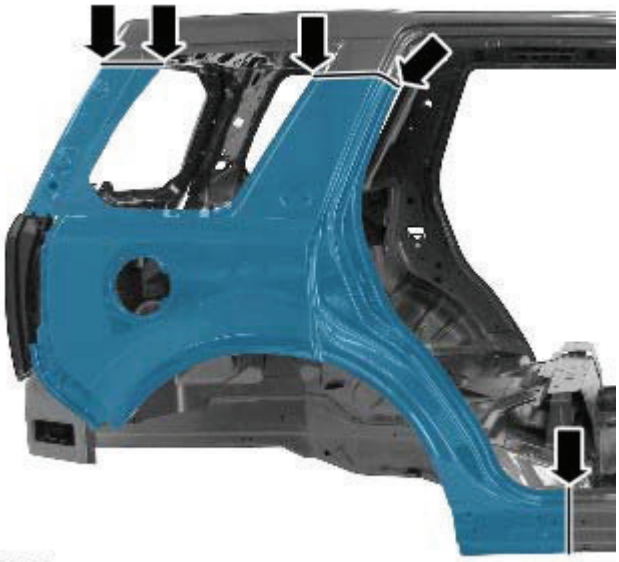

E85939

18. Dress all welded joints.

19. The installation of associated panels and mechanical components is the reverse of removal.

Published: 11-May-2011

Rear End Sheet Metal Repairs - Rear Side Member Section

Removal and Installation

Removal

• NOTE: The rear side member section is cut from the rear side member service panel. The section is approximately 410mm in length and is serviced with the rear side member lower extension.

• NOTE: It is necessary to remove the spare wheel well to allow access to the rear side member section.

1. The rear side member section is replaced in conjunction with:

- Rear bumper cover
- Rear bumper armature
- Back panel
- Rear bumper mounting
- Inner back panel assembly
- Rear side member closing panel.
- Spare wheel well
- Fuel tank
- Rear subframe and suspension assembly

2. For additional information relating to this repair procedure please see the following:
For additional information, refer to: Body and Frame (501-26 Body Repairs - Vehicle Specific Information and Tolerance Checks, Description and Operation) / Standard Workshop Practices (100-00 General Information, Description and Operation).

3. Remove the rear side member closing panel.
For additional information, refer to: Rear Side Member Closing Panel (501-30 Rear End Sheet Metal Repairs, Removal and Installation).

4. Remove the rear subframe / suspension as an assembly.
For additional information, refer to: Rear Subframe (502-00 Uni-Body, Subframe and Mounting System, Removal and Installation).

5. Remove the fuel tank.
For additional information, refer to: Fuel Tank (310-01A Fuel Tank and Lines - I6 3.2L Petrol, Removal and Installation).

6. Mill out the spot welds.

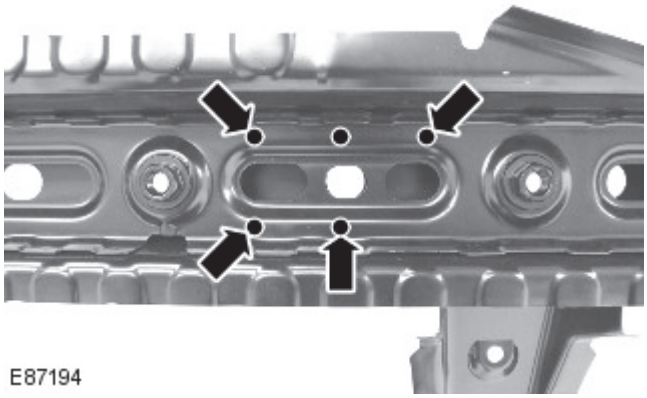

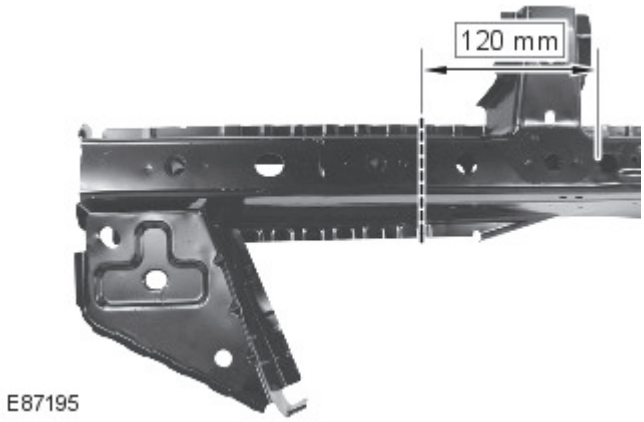

7. Saw cut the old panel at the point illustrated.

8. Separate the joints and remove the old panel.

Installation

1. NOTE: Ensure there is a 50mm minimum stagger between the old side member and the new reinforcement section cuts.

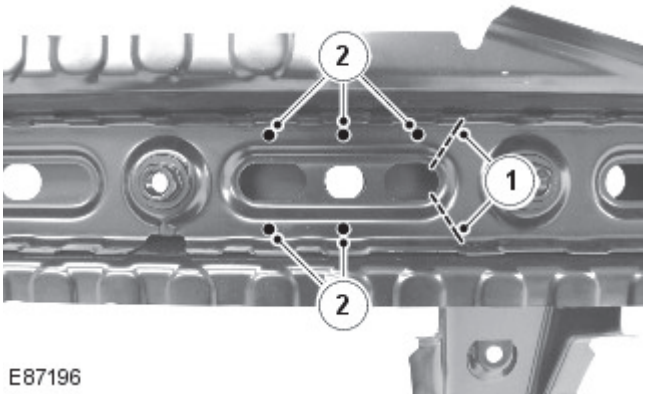

Remove a section of reinforcement from the old panel:

1. Saw cut the reinforcement at the point illustrated, do not cut through the side member.
2. Mill out 5 spot welds.
3. Separate and remove the reinforcement remnant.

2. NOTE: Ensure there is a 50mm minimum stagger between the old side member and the new reinforcement section cuts.

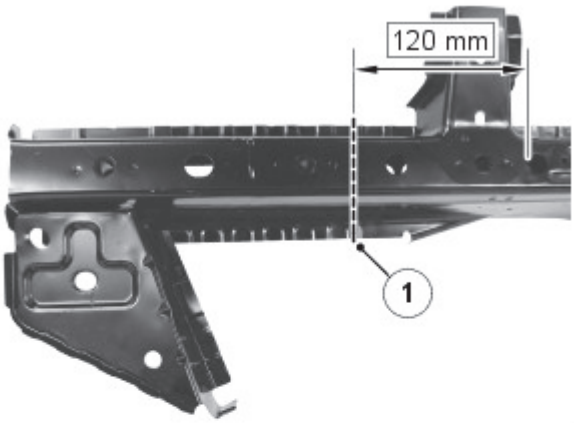

Remove the rear side member section from the service panel:

1. Saw cut the side member at the point illustrated, do not cut through the reinforcement.
2. Mill out 5 spot welds.
3. Saw cut the reinforcement at the point illustrated.
4. Separate and remove the side member section.

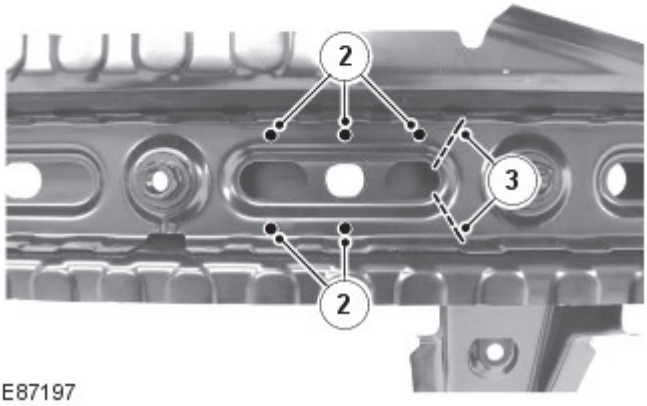

3. Prepare the old and new panel joint surfaces.

4. Drill holes in the new panel ready for MIG plug welding.

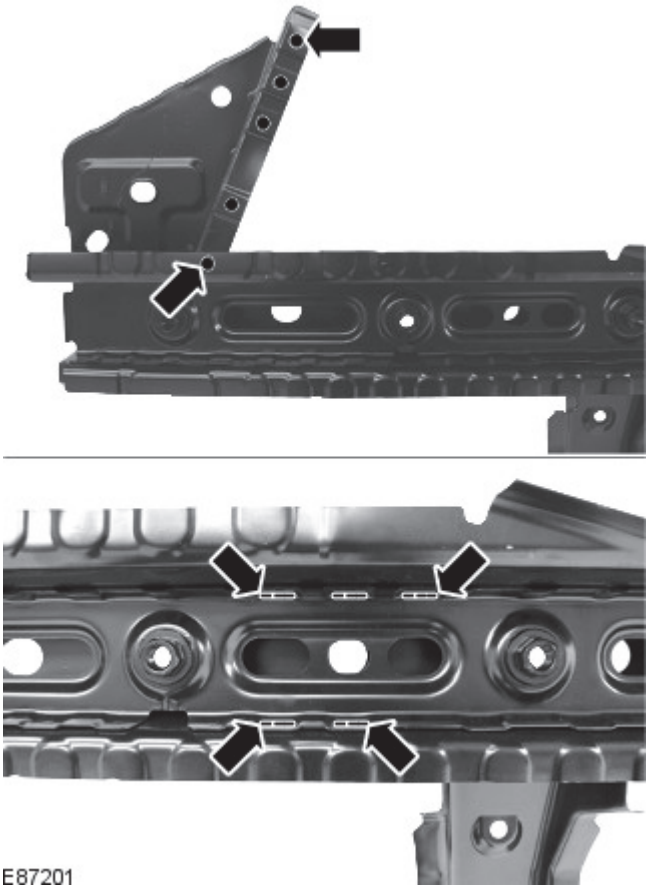

5. Offer up the new panel and clamp into position. Check alignment, if correct, proceed to next step, if not, rectify and recheck before proceeding.

6. With panels clamped into position, tack weld the butt joints.

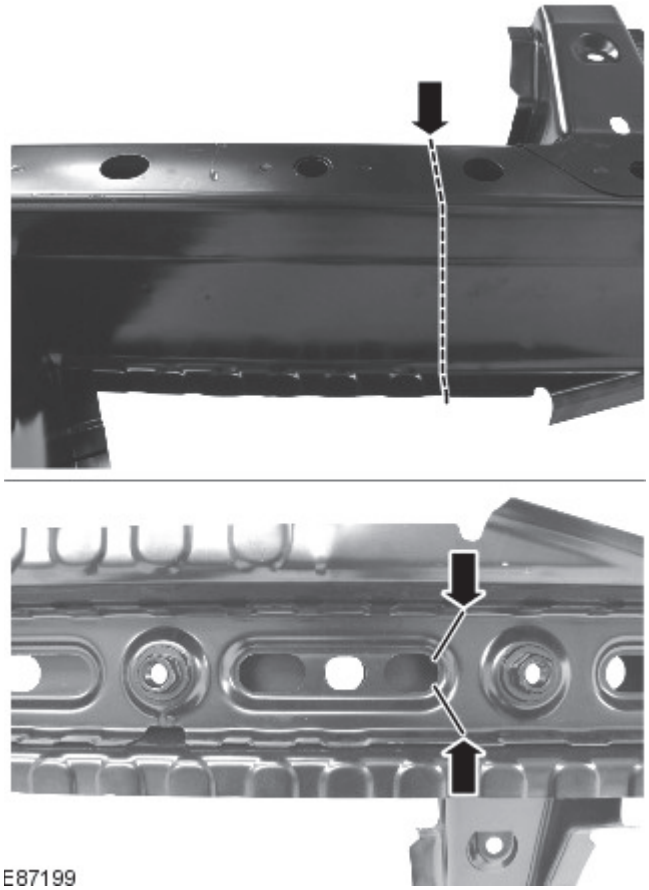

7. Dress the tack welds.

8. MIG weld the butt joints.

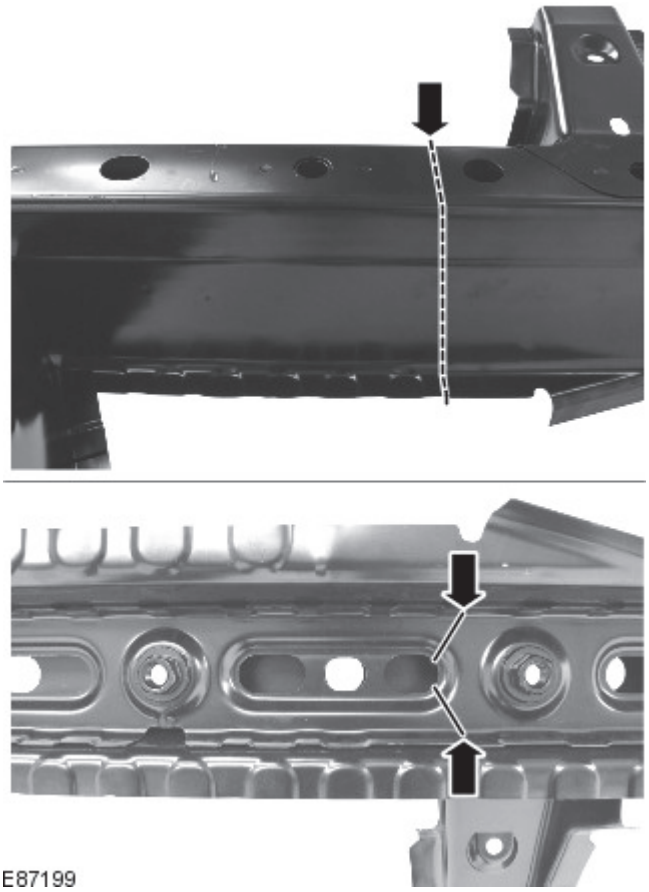

9. MIG plug weld.

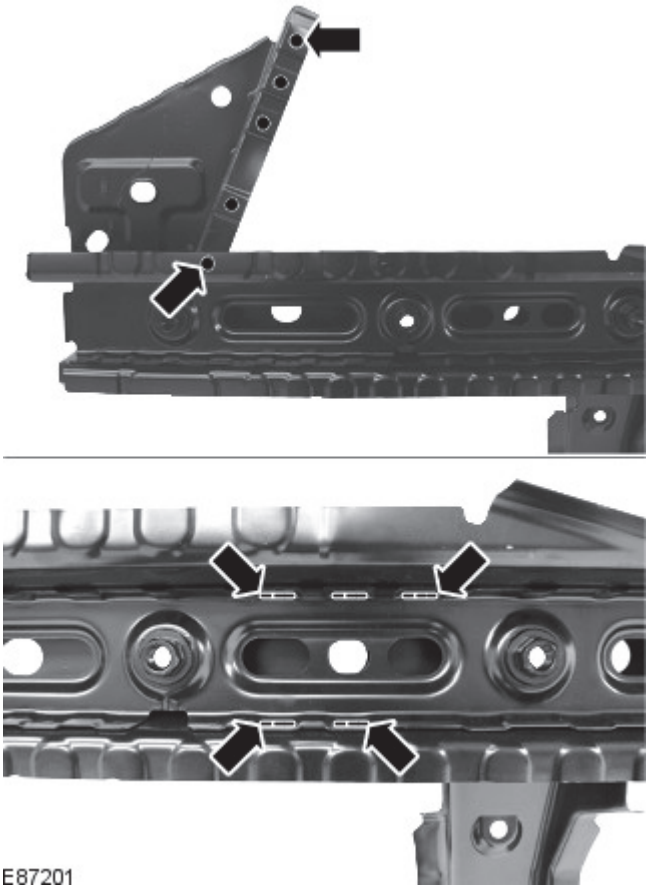

10. Dress all welded joints.

11. The installation of associated panels and mechanical components is the reverse of removal.

Published: 11-May-2011

Rear End Sheet Metal Repairs - Rear Side Member Closing Panel

Removal and Installation

Removal

- NOTE: The rear side member closing panel is serviced as a separate weld-on panel.
- NOTE: The panel is serviced less its weld studs.
- NOTE: It is necessary to remove the spare wheel well to allow access to the rear side member closing panel.

1. The rear side member closing panel is replaced in conjunction with:
   - Rear bumper cover
   - Rear bumper armature
   - Back panel
   - Rear bumper mounting
   - Inner back panel assembly
   - Rear side member section
   - Spare wheel well
   - Fuel tank
   - Rear subframe and suspension assembly
2. For additional information relating to this repair procedure please see the following:
   For additional information, refer to: Body and Frame (501-26 Body Repairs - Vehicle Specific Information and Tolerance Checks, Description and Operation) / Standard Workshop Practices (100-00 General Information, Description and Operation).
3. Remove the rear side member section.
   For additional information, refer to: Rear Side Member Section (501-30 Rear End Sheet Metal Repairs, Removal and Installation).
4. Remove the rear subframe / suspension as an assembly.
   For additional information, refer to: Rear Subframe (502-00 Uni-Body, Subframe and Mounting System, Removal and Installation).
5. Remove the fuel tank.
   For additional information, refer to: Fuel Tank (310-01A Fuel Tank and Lines - I6 3.2L Petrol, Removal and Installation).
6. Mill out the spot welds.

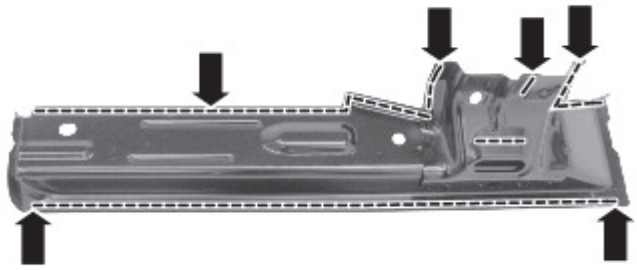

E87203

7. Separate the joints and remove the old panel.

Installation

1. Prepare the old and new panel joint surfaces.

2. Drill hole in the new panel ready for MIG plug welding.

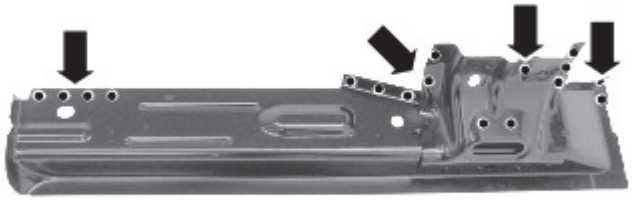

E87204

3. Offer up the new panel and clamp into position. Check alignment, if correct, proceed to next step, if not, rectify and recheck before proceeding.

4. Remove the new panel.

5. Apply adhesive to the areas illustrated.

E87205

6. Offer up the new panel and clamp into position.

7. Spot weld.

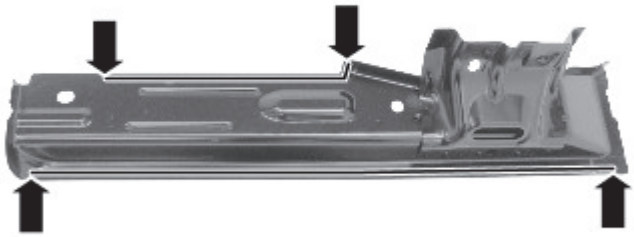

E87206

8. MIG plug weld.

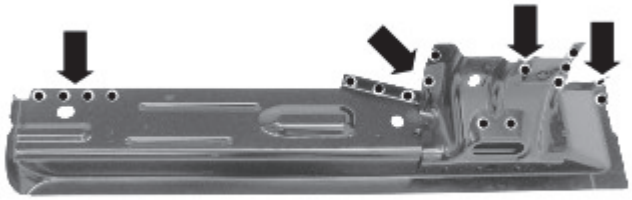

E87204

9. Install weld studs.

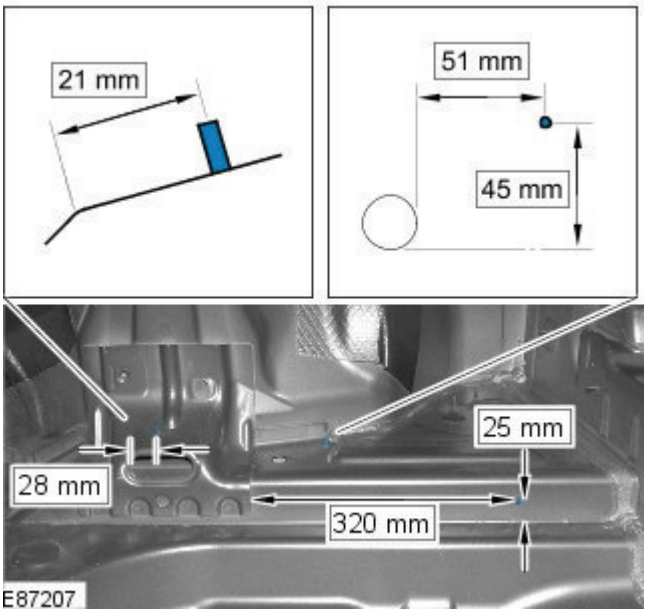

10. Dress all welded joints.

11. The installation of associated panels and mechanical components is the reverse of removal.

Published: 11-May-2011

Rear End Sheet Metal Repairs - Spare Wheel Well

Removal and Installation

Removal

• NOTE: The spare wheel well is serviced as a separate weld on panel, it includes the spare wheel retaining bracket but not the crossmember.

• NOTE: The panel is serviced less its weld studs

1. The spare wheel well is replaced in conjunction with:

- Rear bumper cover
- Rear bumper
- Back panel
- Back panel assembly
- Fuel tank
- Rear subframe and suspension assembly

2. For additional information relating to this repair procedure please see the following:
For additional information, refer to: Body and Frame (501-26 Body Repairs - Vehicle Specific Information and Tolerance Checks, Description and Operation) / Standard Workshop Practices (100-00 General Information, Description and Operation).

3. Remove the back panel assembly.
For additional information, refer to: Back Panel (501-30 Rear End Sheet Metal Repairs, Removal and Installation).

4. Remove the rear subframe and suspension as an assembly.

5. Remove the fuel tank.
For additional information, refer to: Fuel Tank (310-01A Fuel Tank and Lines - I6 3.2L Petrol, Removal and Installation) / Fuel Tank (310-01B Fuel Tank and Lines - TD4 2.2L Diesel, Removal and Installation).

6. Remove the rear seat.

7. Remove the RH and LH rocker panel inner trims.

8. Remove the RH and LH rear quarter panel mouldings.
For additional information, refer to: Rear Quarter Panel Moulding (501-08 Exterior Trim and Ornamentation, Removal and Installation).

9. Release and lay aside the carpet.

10. Remove the RH and LH brake pipes.

11. Release and lay aside the wiring harnesses at the floor panel and inner quarter panels.

12. Mill out the spot welds.

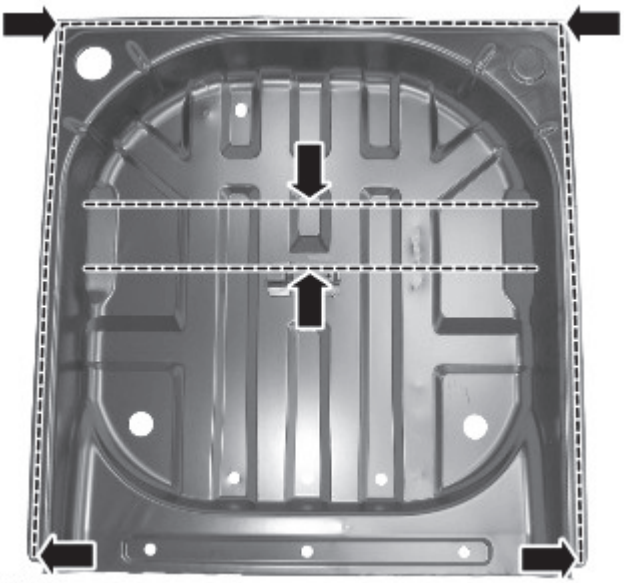

E87219

13. Separate the joints and remove the old panel.

Installation

1. Prepare the old and new panel joint surfaces.
2. Drill holes in the new panel ready for MIG plug welding.

E87220

3. Offer up the new panel and clamp into position. Check alignment, if correct, proceed to next step, if not, rectify and recheck before proceeding.
4. MIG plug weld.

E87220

5. Install weld studs.

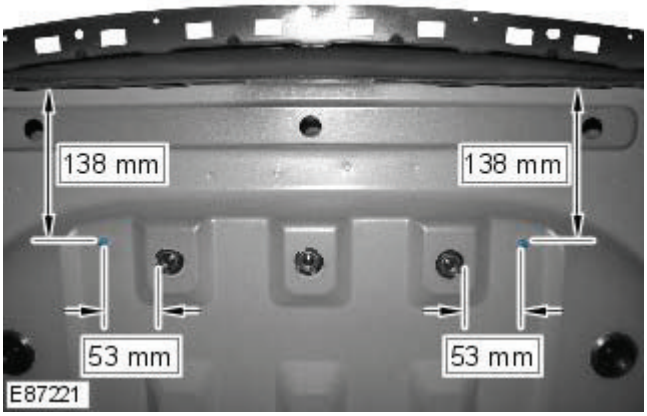

6. Dress all welded joints.

7. The installation of associated panels and mechanical components is the reverse of removal.

Published: 11-May-2011

Rear End Sheet Metal Repairs - Rear Wheelhouse Outer

Removal and Installation

Removal

• NOTE: The rear wheelhouse outer is serviced as a separate weld-on panel.

1. The rear wheelhouse outer is replaced in conjunction with:

- Rear bumper cover
- Quarter panel
- Rear door
- Quarter glass
- Inner quarter panel

2. For additional information relating to this repair procedure please see the following:
For additional information, refer to: Body and Frame (501-26 Body Repairs - Vehicle Specific Information and Tolerance Checks, Description and Operation) / Standard Workshop Practices (100-00 General Information, Description and Operation).

3. Remove the inner quarter panel.
For additional information, refer to: Inner Quarter Panel (501-30 Rear End Sheet Metal Repairs, Removal and Installation).

4. Mill out the spot welds.

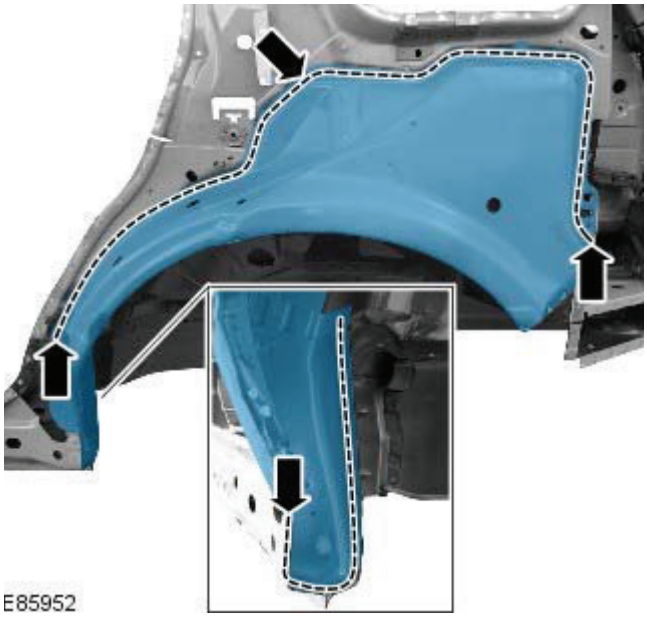

5. Separate the joints and remove the old panel.

Installation

1. Prepare the old and new panel joint surfaces.

2. Drill holes in the new panel ready for MIG plug welding.

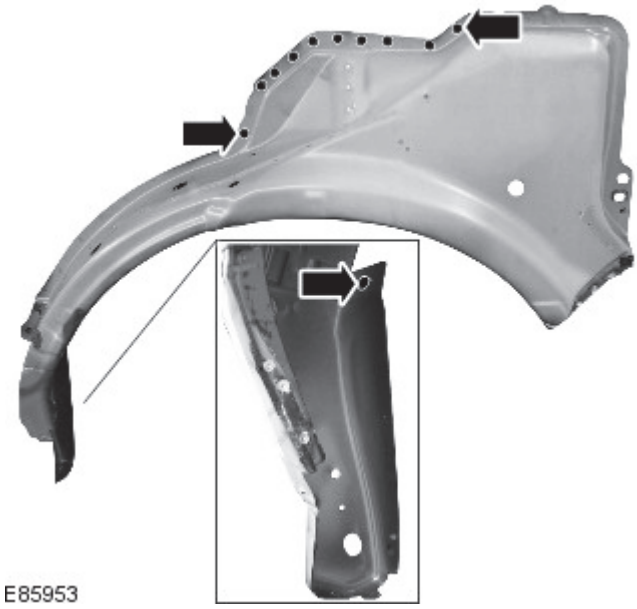

E85953

3. Offer up the new panel and clamp into position. Check alignment, if correct, proceed to next step. If not, rectify and recheck before proceeding.
4. Remove the new panel.
5. Apply adhesive to the areas illustrated.

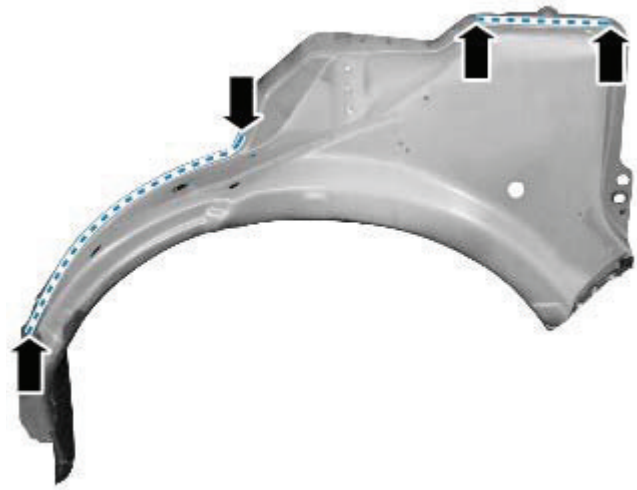

E85954

6. Offer up the new panel and clamp into position.
7. Tack weld the butt joints.

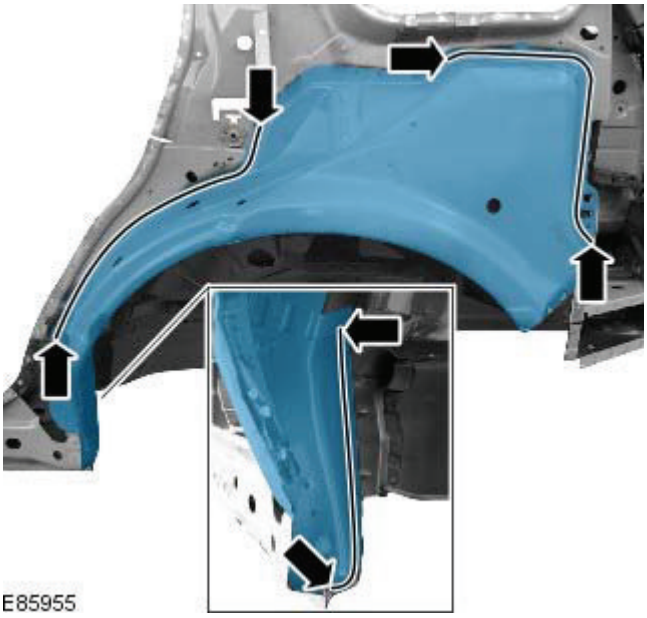

8. Spot weld.

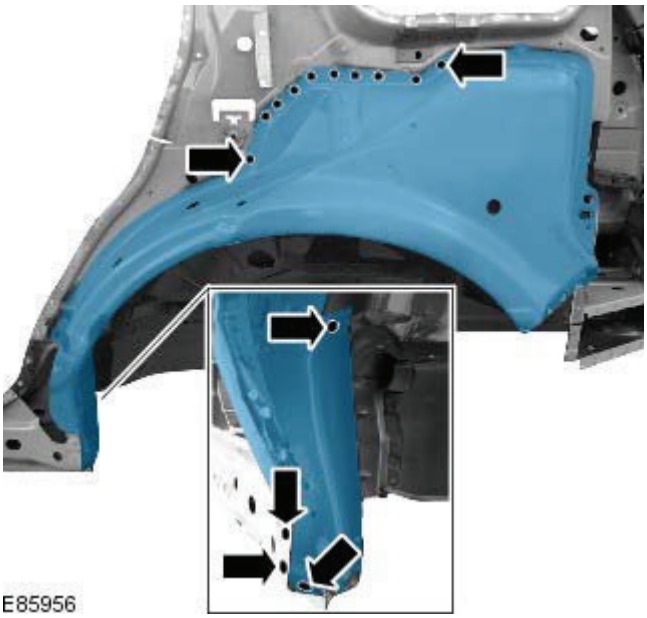

9. MIG plug weld.

10. Dress all welded joints.

11. The installation of associated panels and mechanical components is the reverse of removal.

Published: 11-May-2011

Rear End Sheet Metal Repairs - Rear Bumper Mounting

Removal and Installation

Removal

• NOTE: The rear bumper mounting is serviced as a separate weld-on panel.

1. The rear bumper mounting is replaced in conjunction with:

- Rear bumper cover
- Rear bumper armature
- Back panel

2. For additional information relating to this repair procedure please see the following:
For additional information, refer to: Body and Frame (501-26 Body Repairs - Vehicle Specific Information and Tolerance Checks, Description and Operation) / Standard Workshop Practices (100-00 General Information, Description and Operation).

3. Remove the back panel.
For additional information, refer to: Back Panel (501-30 Rear End Sheet Metal Repairs, Removal and Installation).

4. Mill out the spot welds.

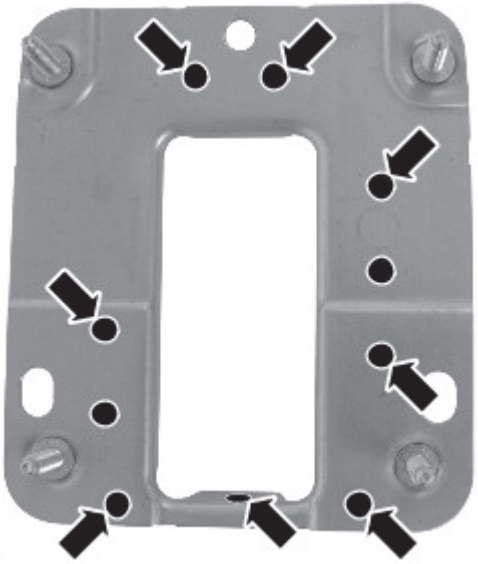

E87215

5. Separate the joints and remove the old panel.

Installation

1. Prepare the old and new panel joint surfaces.

2. Drill hole in the new panel ready for MIG plug welding.

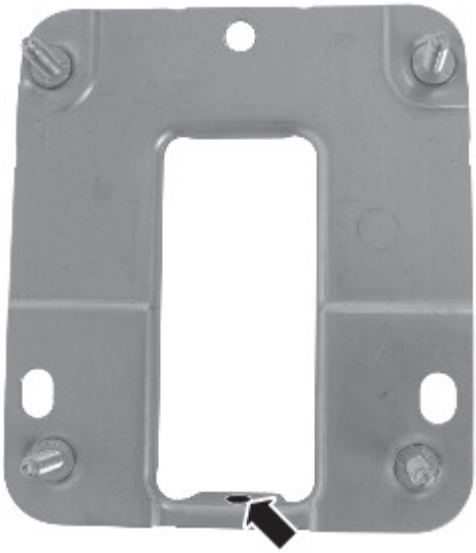

E87216

3. Offer up the new panel and clamp into position. Check alignment, if correct, proceed to next step, if not, rectify and recheck before proceeding.

4. Spot weld.

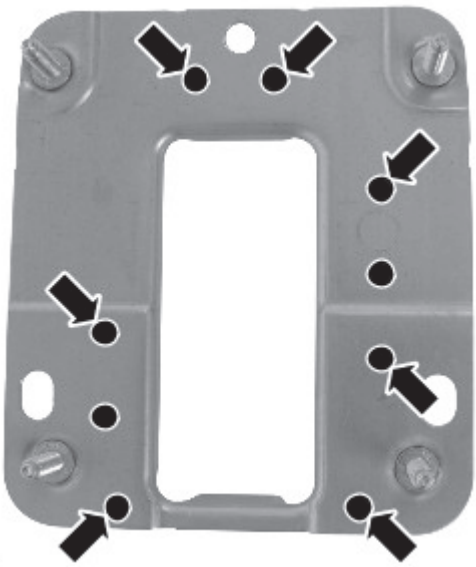

E87217

5. MIG plug weld.

6. Dress all welded joints.

7. The installation of associated panels and mechanical components is the reverse of removal.

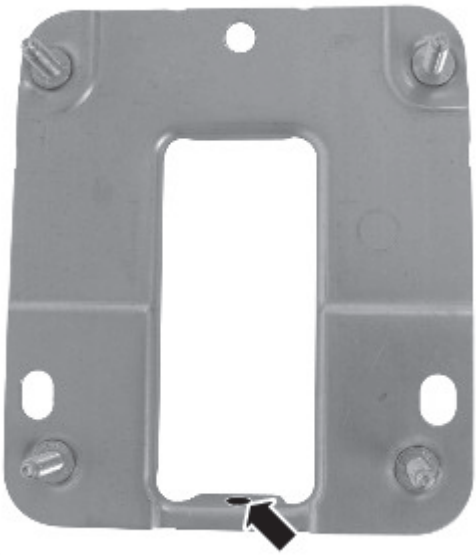

E87216

Published: 11-May-2011

Rear End Sheet Metal Repairs - Back Panel

Removal and Installation

Removal

• NOTE: The back panel is serviced as a separate weld-on panel, it includes the bumper retaining bracket.

• NOTE: It is necessary to remove sections of both rear lamp mounting panels to enable removal and refitment of the back panel, (unless the back panel is being replaced in conjunction with a rear lamp mounting panel).

1. The back panel is replaced in conjunction with:

- Rear bumper cover
- Rear bumper

2. For additional information relating to this repair procedure please see the following:
For additional information, refer to: Body and Frame (501-26 Body Repairs - Vehicle Specific Information and Tolerance Checks, Description and Operation) / Standard Workshop Practices (100-00 General Information, Description and Operation).

3. Remove the rear bumper.
For additional information, refer to: Rear Bumper (501-19 Bumpers, Removal and Installation).

4. Remove the RH and LH bumper retainer guides.

5. Remove the liftgate aperture weatherseal.

6. Remove the back panel trim.

7. Remove the RH and LH quarter panel inner trims.
For additional information, refer to: Rear Quarter Trim Panel (501-05 Interior Trim and Ornamentation, Removal and Installation).

8. Remove the RH and LH forced air extraction grilles.

9. Remove the spare road wheel.

10. Remove the subwoofer amplifier.
For additional information, refer to: Subwoofer Amplifier (415-01 Information and Entertainment System, Removal and Installation).

11. Remove the exhaust assembly.
For additional information, refer to: Exhaust System (309-00A Exhaust System - I6 3.2L Petrol, Removal and Installation).

12. Remove the floor panel exhaust heat shield.

13. Remove the RH and LH road wheels.
For additional information, refer to: Wheel and Tire (204-04 Wheels and Tires, Removal and Installation).

14. Release and lay aside the insulating material at the back panel.

15. Release and lay aside the back panel wiring harness.

16. Saw cut each rear lamp mounting panel, as illustrated.

18. Separate the joints and remove the rear lamp mounting panel sections, **retain the sections for refitment.**

19. Mill out the spot welds.

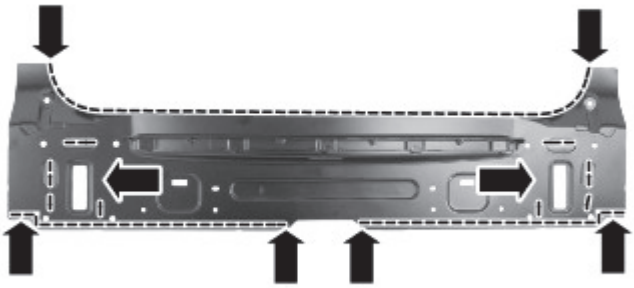

E87177

E87176

20. Separate the joints and remove the old panel.

Installation

1. Prepare the old and new panel joint surfaces, including the rear lamp mounting panel sections.

2. Drill holes in the new panel ready for MIG plug welding.

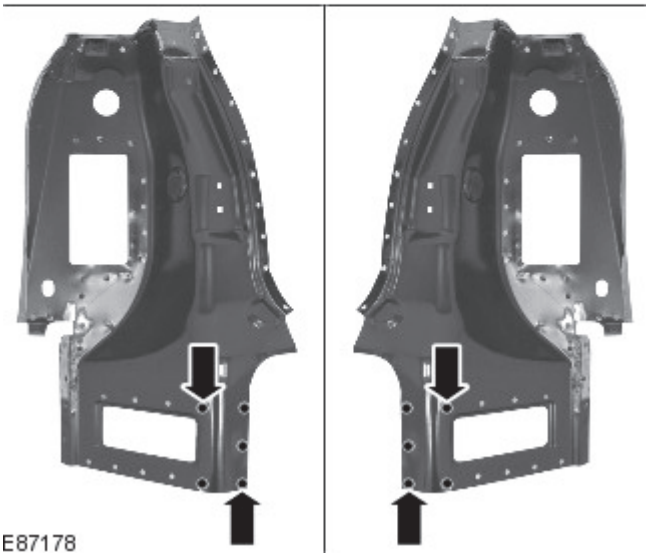

E87178

3. Offer up the new panel and clamp into position. Check alignment, if correct, proceed to next step, if not, rectify and recheck before proceeding.

4. Spot weld.

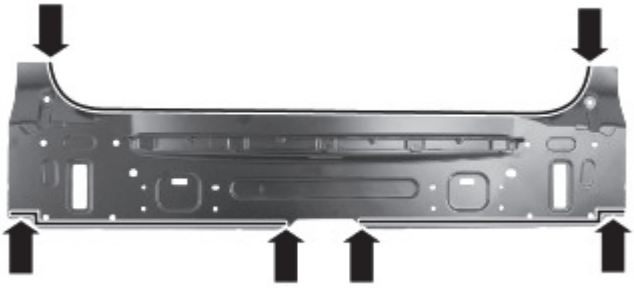

E87179

5. MIG plug weld.

E87180

6. Apply adhesive to the rear lamp mounting panel sections at the points illustrated.

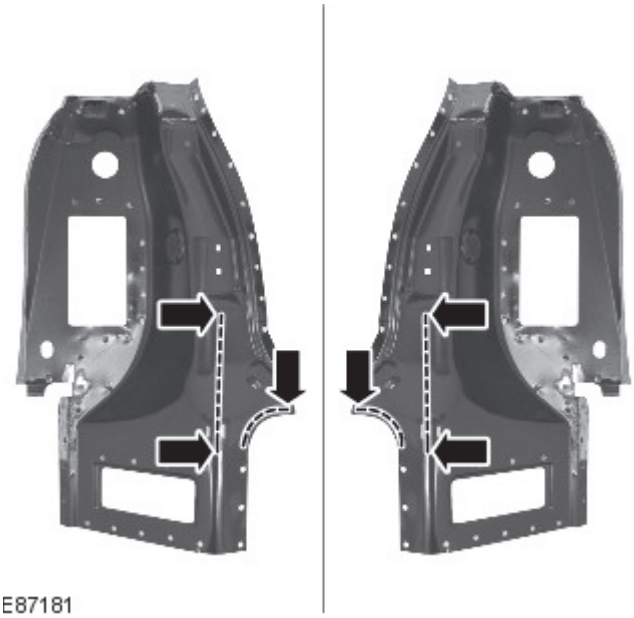

E87181

7. Offer up the rear lamp mounting panel sections and clamp into position. Check alignment, if correct, proceed to next step, if not, rectify and recheck before proceeding.
8. Tack weld the butt joints.
9. MIG plug weld.

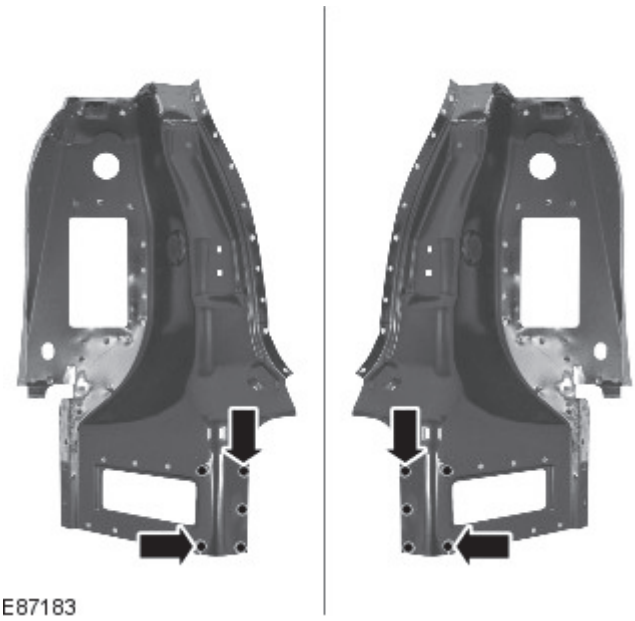

E87183

10. Dress the tack welds.

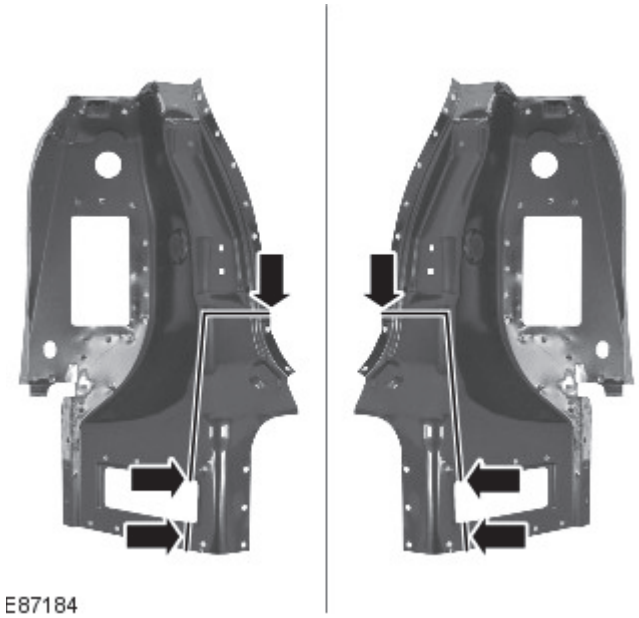

11. MIG weld the butt joint.

12. Dress all welded joints.

13. The installation of associated panels and mechanical components is the reverse of removal.

Published: 11-May-2011

Rear End Sheet Metal Repairs - Rear Crossmember

Removal and Installation

Removal

- NOTE: The rear crossmember is serviced as a separate weld-on panel.
- NOTE: The panel is serviced less its weld studs.

1. The rear crossmember is replaced in conjunction with:
   - Rear bumper cover
   - Rear bumper armature
   - Back panel
   - Inner back panel assembly
   - Spare wheel well
2. For additional information relating to this repair procedure please see the following:
   For additional information, refer to: Body and Frame (501-26 Body Repairs - Vehicle Specific Information and Tolerance Checks, Description and Operation) / Standard Workshop Practices (100-00 General Information, Description and Operation).
3. Remove the spare wheel well.
   For additional information, refer to: Spare Wheel Well (501-30 Rear End Sheet Metal Repairs, Removal and Installation).
4. Mill out the spot welds.

E87209

5. Separate the joints and remove the old panel.

Installation

1. Prepare the old and new panel joint surfaces.
2. Offer up the new panel and clamp into position. Check alignment, if correct, proceed to next step, if not, rectify and recheck before proceeding.
3. Spot weld.

E87210

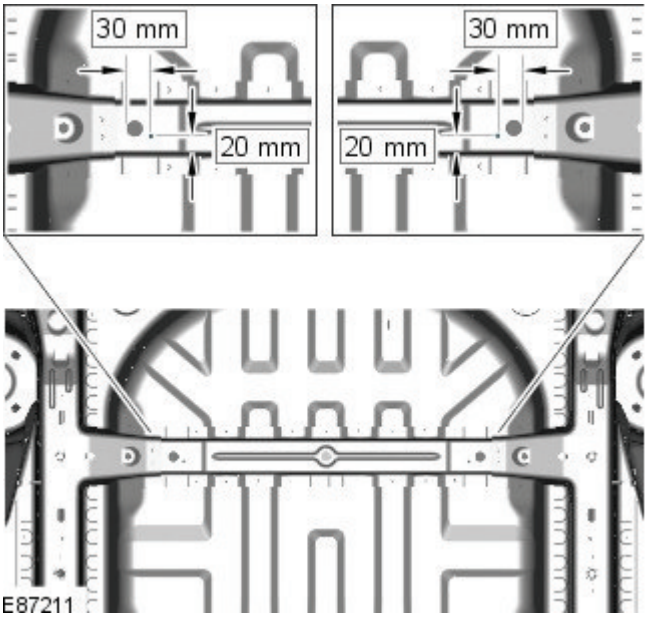

4. Install weld studs.

5. Dress all welded joints.

6. The installation of associated panels and mechanical components is the reverse of removal.

Published: 11-May-2011

Rear End Sheet Metal Repairs - Rear Side Member Lower Side Extension

Removal and Installation

Removal

• NOTE: The rear side member lower side extension is serviced as a separate weld-on panel, it is also serviced as part of the rear side member.

1. The rear side member lower side extension is replaced in conjunction with:
   - Rear bumper cover
   - Rear bumper armature
   - Rear lamp mounting panel
2. For additional information relating to this repair procedure please see the following:
   For additional information, refer to: Body and Frame (501-26 Body Repairs - Vehicle Specific Information and Tolerance Checks, Description and Operation) / Standard Workshop Practices (100-00 General Information, Description and Operation).
3. Remove the rear lamp mounting panel.
   For additional information, refer to: Rear Lamp Mounting Panel (501-30 Rear End Sheet Metal Repairs, Removal and Installation).
4. Mill out the spot welds.

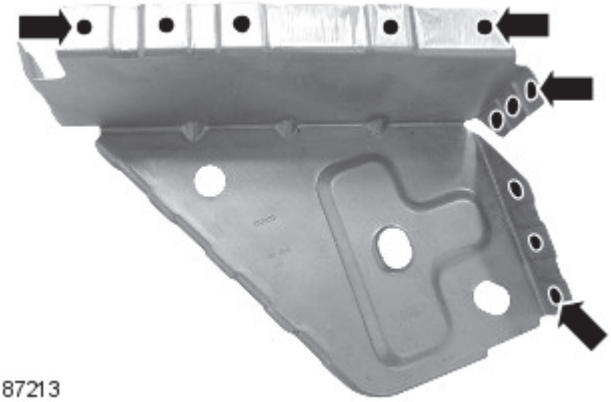

E87213

5. Separate the joints and remove the old panel.

Installation

1. Prepare the old and new panel joint surfaces.
2. Offer up the new panel and clamp into position. Check alignment, if correct, proceed to next step, if not, rectify and recheck before proceeding.
3. MIG plug weld.

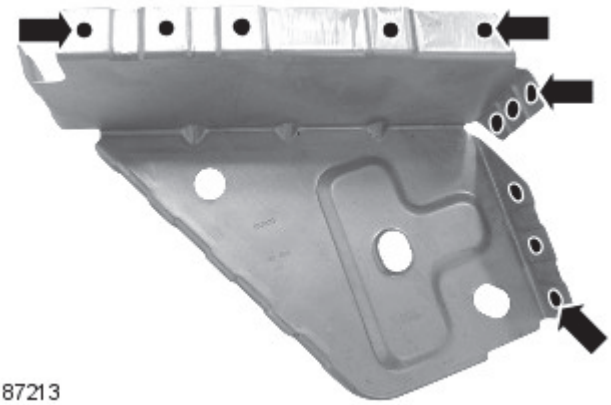

E87213

4. Dress all welded joints.
5. The installation of associated panels and mechanical components is the reverse of removal.

Published: 11-May-2011

Rear End Sheet Metal Repairs - Rear Lamp Mounting Panel

Removal and Installation

Removal

• NOTE: The rear lamp mounting panel is serviced as a separate weld-on panel.

• NOTE: There are NVH elements attached to the old panel, they are not serviced on the new panel. If damaged, new elements will be required.

1. The rear lamp mounting panel is replaced in conjunction with:

- Rear bumper cover
- Rear bumper armature

2. For additional information relating to this repair procedure please see the following:
For additional information, refer to: Body and Frame (501-26 Body Repairs - Vehicle Specific Information and Tolerance Checks, Description and Operation) / Standard Workshop Practices (100-00 General Information, Description and Operation).

3. Remove the rear bumper.
For additional information, refer to: Rear Bumper (501-19 Bumpers, Removal and Installation).

4. Disconnect both battery cables.

5. Remove the D-Pillar trim panel.
For additional information, refer to: D-Pillar Trim Panel (501-05 Interior Trim and Ornamentation, Removal and Installation).

6. Remove the rear wheel and tire.

7. Remove the rear quarter window moulding.

8. Remove the loadspace trim panel.

9. Remove the forced air extraction grille.

10. Release the insulating material and lay aside.

11. Release and lay aside the wiring harness.

12. Use a belt sander to sand down the spot welds in the area illustrated.

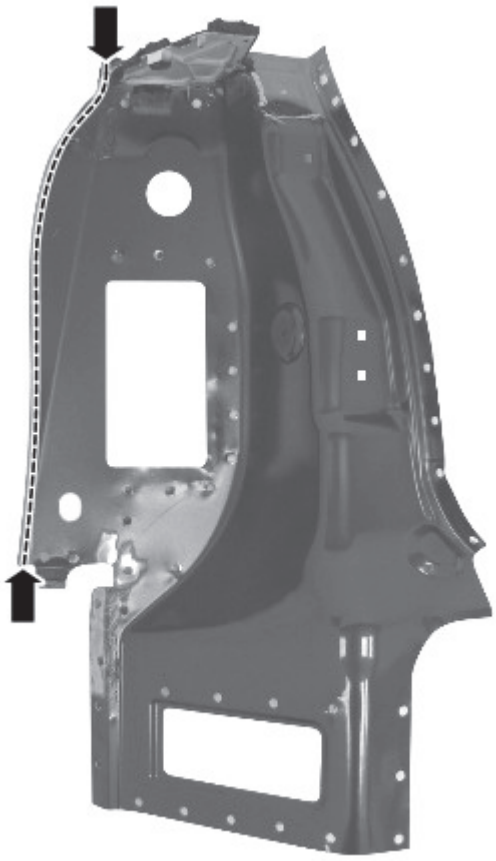

E87186

13. Mill out the remaining spot welds.

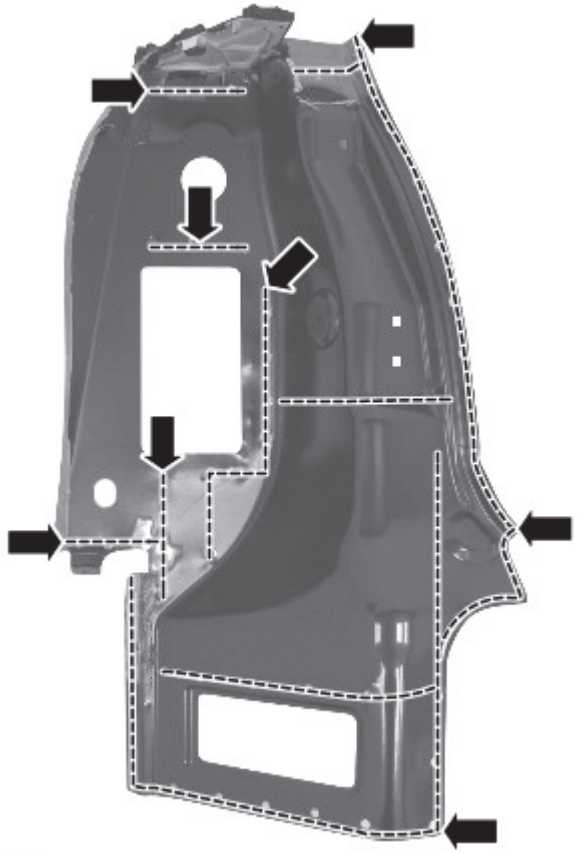

E87187

14. Separate the joints and remove the old panel, also releasing the NVH elements.

Installation

1. Prepare the old and new panel joint surfaces, including the rear lamp mounting panel sections.
2. Drill holes in the new panel ready for MIG plug welding.
3. Offer up the new panel and clamp into position. Check alignment, if correct, proceed to next step, if not, rectify and recheck before proceeding.
4. Remove the new panel.

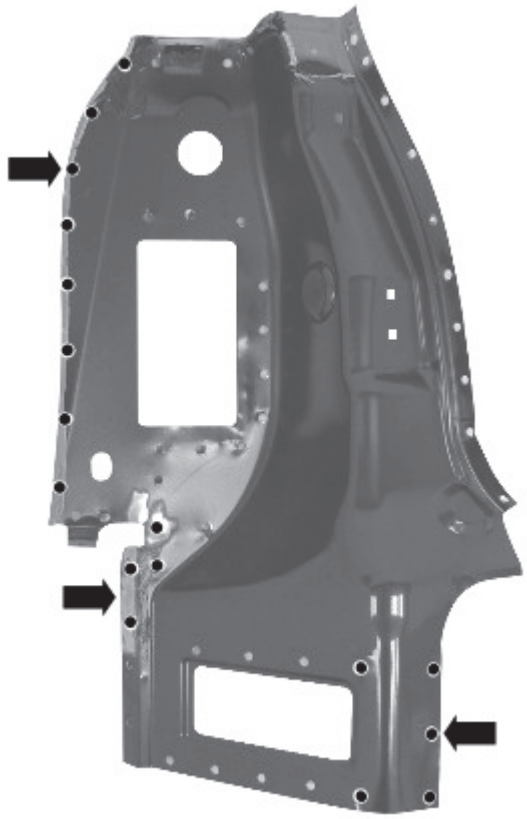

E87192

5. Apply adhesive to the areas illustrated.

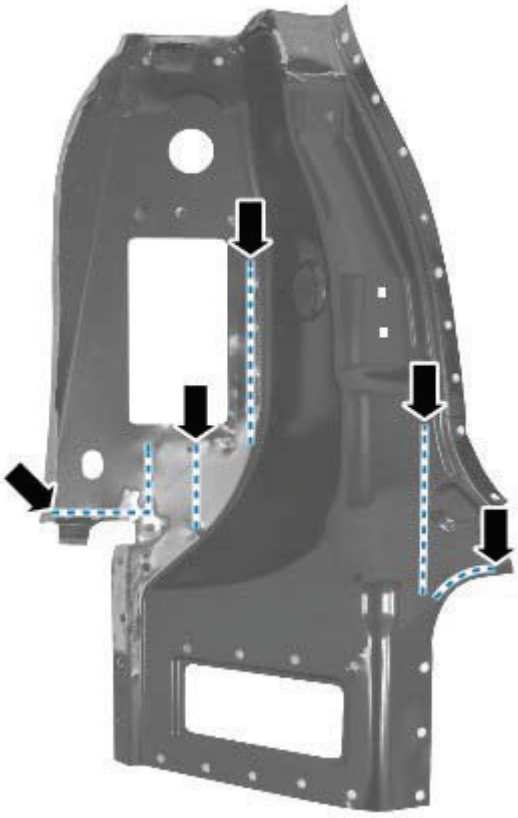

E87189

6. If necessary, renew the NVH elements.

7. Apply sealer adhesive to the NVH elements.

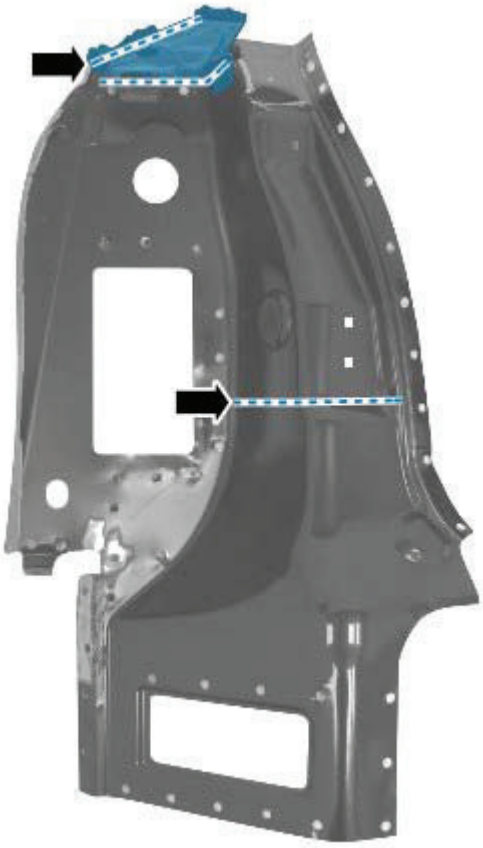

E87190

8. Offer up the new panel and clamp into position.

9. Spot weld.

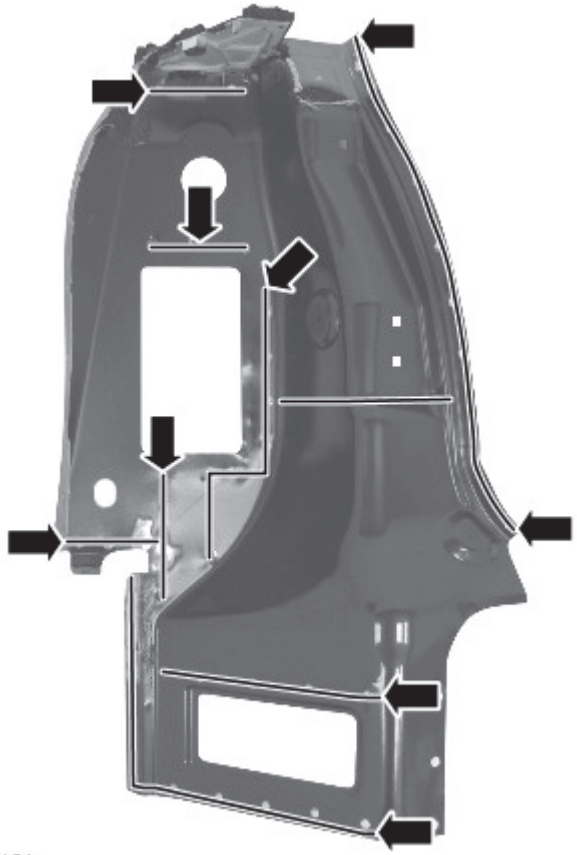

E87191

10. MIG plug weld.

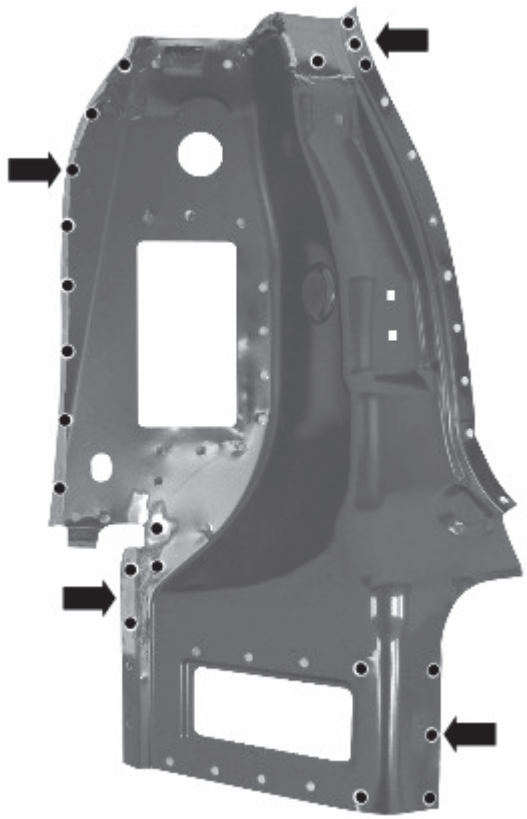

E87188

11. Dress all welded joints.

12. The installation of associated panels and mechanical components is the reverse of removal.

Published: 11-May-2011

Rear End Sheet Metal Repairs - Water Drain Panel Section

Removal and Installation

Removal

• NOTE: The water drain panel section is cut from the water drain panel, which is a separate weld-on panel.

1. The water drain panel section is replaced in conjunction with:

- Rear bumper cover
- Rear bumper armature
- Liftgate
- Quarter panel
- Rear lamp mounting panel

2. For additional information relating to this repair procedure please see the following:
For additional information, refer to: Body and Frame (501-26 Body Repairs - Vehicle Specific Information and Tolerance Checks, Description and Operation) / Standard Workshop Practices (100-00 General Information, Description and Operation).

3. Remove the quarter panel.
For additional information, refer to: Quarter Panel (501-30 Rear End Sheet Metal Repairs, Removal and Installation).

4. Remove the rear lamp mounting panel.
For additional information, refer to: Rear Lamp Mounting Panel (501-30 Rear End Sheet Metal Repairs, Removal and Installation).

5. Mill out the spot welds.

E87454

E87455

6. Saw cut the old panel at the point illustrated, using the new panel for reference, ensuring that the new panel overlaps.

7. Separate the joints and remove the old panel.

Installation

1. Offer up and align the new panel and clamp into position, overlapping the old panel. Saw cut the new and old panels at the point where the MIG butt joint is to be made.
2. Remove the new panel and the old remnants.
3. Prepare the old and new panel joint surfaces.
4. Offer up the new panel and clamp into position. Check alignment, if correct, proceed to next step, if not, rectify and recheck before proceeding.

5. Tack weld the butt joint.

E87455

6. Spot weld.

E87456

7. Dress the tack welds.

E87457

8. MIG weld the butt joint.

9. Dress all welded joints.

10. The installation of associated panels and mechanical components is the reverse of removal.

Published: 11-May-2011

Rear End Sheet Metal Repairs - Rear Wheelhouse Front Extension

Removal and Installation

Removal

• NOTE: The rear wheelhouse front extension is to be unpicked from the rear wheelhouse outer service panel.

1. The rear wheelhouse front extension is replaced in conjunction with:
   - Rear bumper cover
   - Quarter panel
   - Rear door
   - Quarter glass
   - Inner quarter panel
2. For additional information relating to this repair procedure please see the following:
   For additional information, refer to: Body and Frame (501-26 Body Repairs - Vehicle Specific Information and Tolerance Checks, Description and Operation) / Standard Workshop Practices (100-00 General Information, Description and Operation).
3. Remove the inner quarter panel.
   For additional information, refer to: Inner Quarter Panel (501-30 Rear End Sheet Metal Repairs, Removal and Installation).
4. Mill out the spot welds.

5. Separate the joints and remove the old panel.

Installation

E85947

1. Remove the rear wheelhouse front extension from the wheelhouse outer service panel.

2. Prepare the old and new panel joint surfaces.

3. Drill holes in the new panel ready for MIG plug welding.

E85948

4. Offer up the new panel and clamp into position. Check alignment, if correct, proceed to next step, if not, rectify and recheck before proceeding.

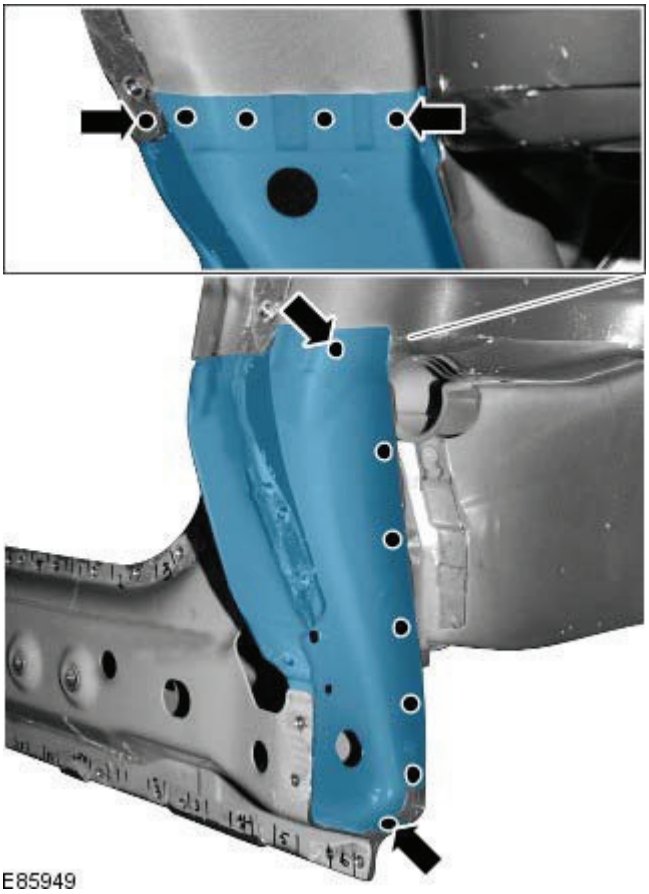

5. Spot weld.

6. MIG plug weld.

7. Dress all welded joints.

8. The installation of associated panels and mechanical components is the reverse of removal.

Published: 11-May-2011

Rear End Sheet Metal Repairs - Inner Quarter Panel

Removal and Installation

Removal

• NOTE: The inner quarter panel is serviced as a separate weld-on panel.

• NOTE: There is a NVH element on this panel, it is not serviced on the new panel. If damaged, a new element will be required.

1. The inner quarter panel is replaced in conjunction with:

- Rear bumper cover
- Quarter panel
- Rear door
- Quarter glass

2. For additional information relating to this repair procedure please see the following:
For additional information, refer to: Body and Frame (501-26 Body Repairs - Vehicle Specific Information and Tolerance Checks, Description and Operation) / Standard Workshop Practices (100-00 General Information, Description and Operation).

3. Remove the quarter panel.
For additional information, refer to: Quarter Panel (501-30 Rear End Sheet Metal Repairs, Removal and Installation).

4. Mill out the spot welds.

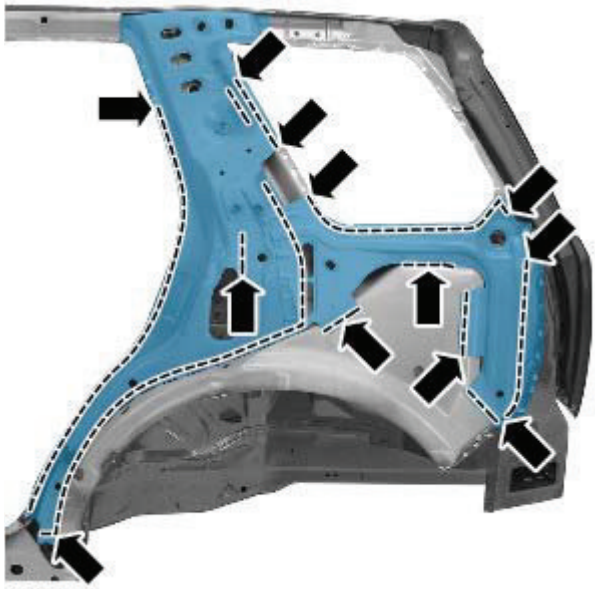

E85922

E85923

5. Saw cut the old panel at the point illustrated, using the new panel for reference, ensuring that the new panel overlaps.

6. Separate the joints and remove the old panel, also releasing the NVH element.

Installation

E85924

1. Offer up and align the new panel and clamp into position, overlapping the old panel. Saw cut through the new and old panels at the point where the MIG butt joint is to be made.

2. Remove the new panel and the old remnants.
3. Prepare the old and new panel joint surfaces.


E85925

4. Drill holes in the new panel ready for MIG plug welding.

5. Offer up the new panel and clamp into position. Check alignment, if correct, proceed to next step, if not, rectify and recheck before proceeding.

6. Remove the new panel.

7. If necessary, renew the NVH element.

8. Apply sealer adhesive to the NVH element.

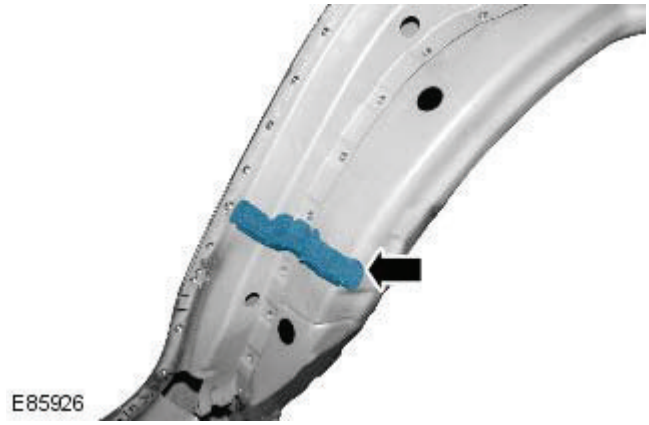
E85926

9. Offer up the new panel and clamp into position.

10. Tack weld the butt joint.

11. Spot weld.

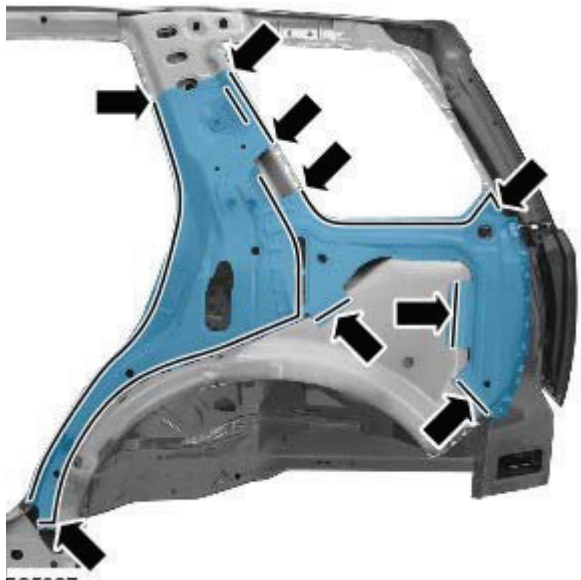
E85927

12. MIG plug weld.

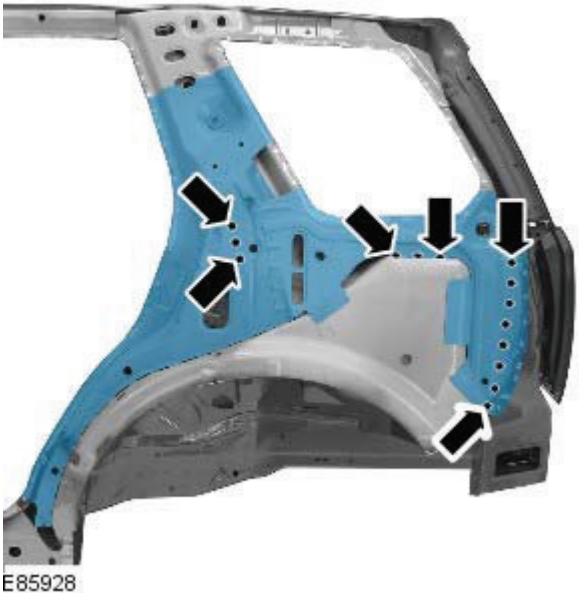

13. Dress the tack welds.

14. MIG weld the butt joint.

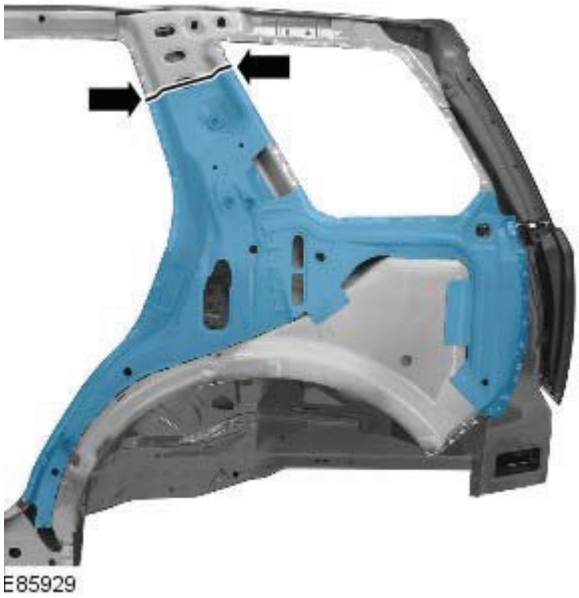

15. Dress all welded joints.

16. The installation of associated panels and mechanical components is the reverse of removal.

Published: 11-May-2011

Rear End Sheet Metal Repairs - Front Inner Quarter Panel

Removal and Installation

Removal

• NOTE: The front inner quarter panel is to be unpicked from the inner quarter panel, it is not serviced separately.

• NOTE: There is a NVH element on this panel, it is not serviced on the new panel. If damaged, a new element will be required.

1. The front inner quarter panel is replaced in conjunction with:

- Rear bumper cover
- Quarter panel
- Rear door
- Quarter glass

2. For additional information relating to this repair procedure please see the following:
For additional information, refer to: Body and Frame (501-26 Body Repairs - Vehicle Specific Information and Tolerance Checks, Description and Operation) / Standard Workshop Practices (100-00 General Information, Description and Operation).

3. Remove the quarter panel.
For additional information, refer to: Quarter Panel (501-30 Rear End Sheet Metal Repairs, Removal and Installation).

4. Mill out the spot welds.

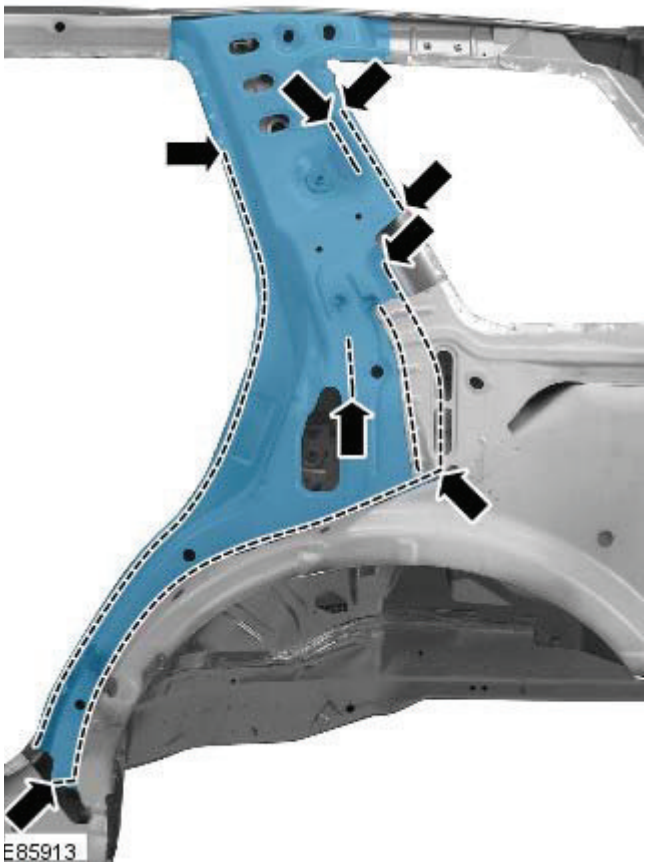

5. Saw cut the old panel at the point illustrated, using the new panel for reference, ensuring that the new panel overlaps.

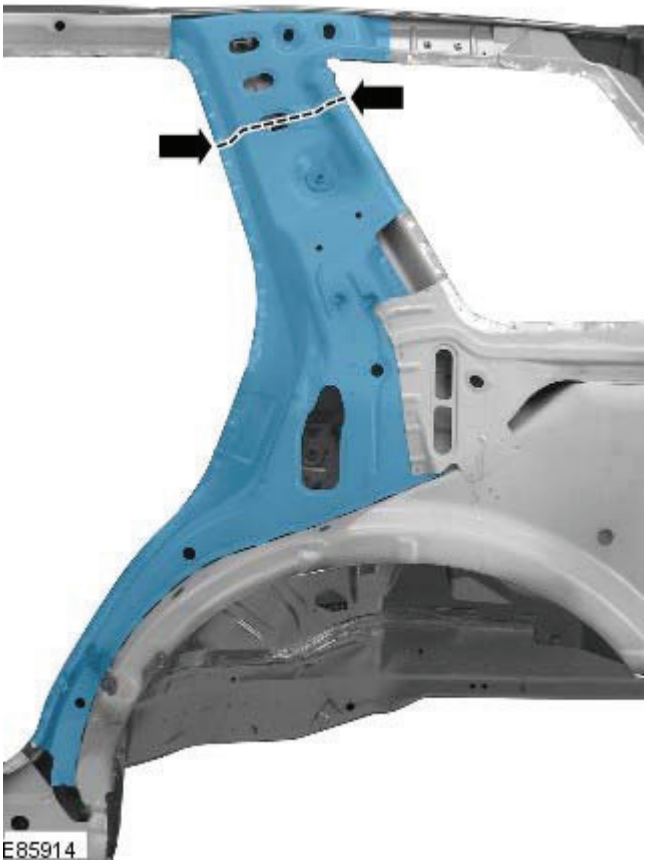

6. Separate the joints and remove the old panel, also releasing the NVH element.

Installation

1. Remove the front inner quarter panel from the inner quarter service panel, mill out 5 spot welds.
2. Offer up and align the new panel and clamp into position, overlapping the old panel. Saw cut through the new and old panels at the point where the MIG butt joint is to be made.
3. Remove the new panel and the old remnants.
4. Prepare the old and new panel joint surfaces.
5. Drill holes in the new panel ready for MIG plug welding.

6. Offer up the new panel and clamp into position. Check alignment, if correct, proceed to next step, if not, rectify and recheck before proceeding.
7. Remove the new panel.
8. If necessary, renew the NVH element.

9. Apply sealer adhesive to the NVH element.

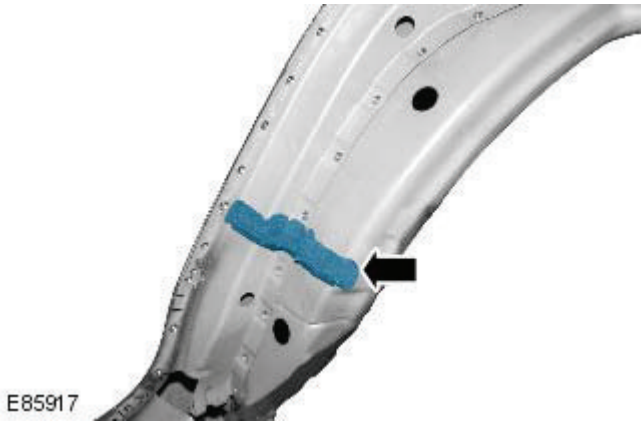

10. Offer up the new panel and clamp into position.

11. Tack weld the butt joint.

12. Spot weld.

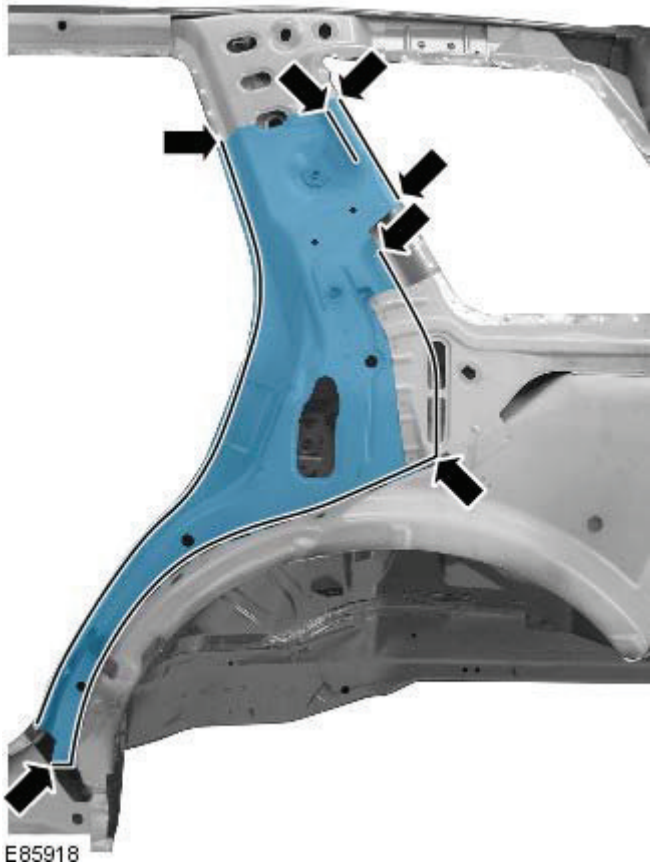

13. MIG plug weld.

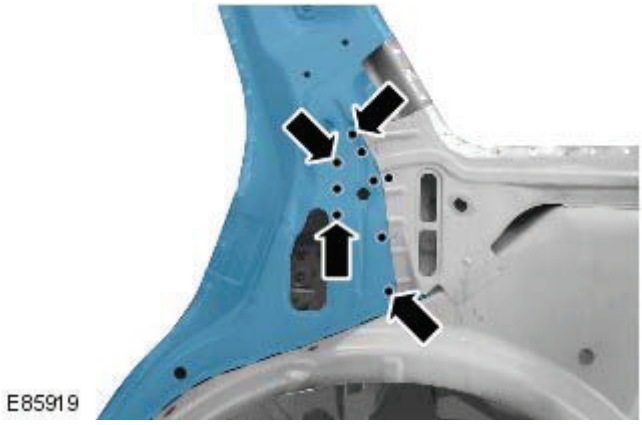

14. Dress the tack welds.

15. MIG weld the butt joint.

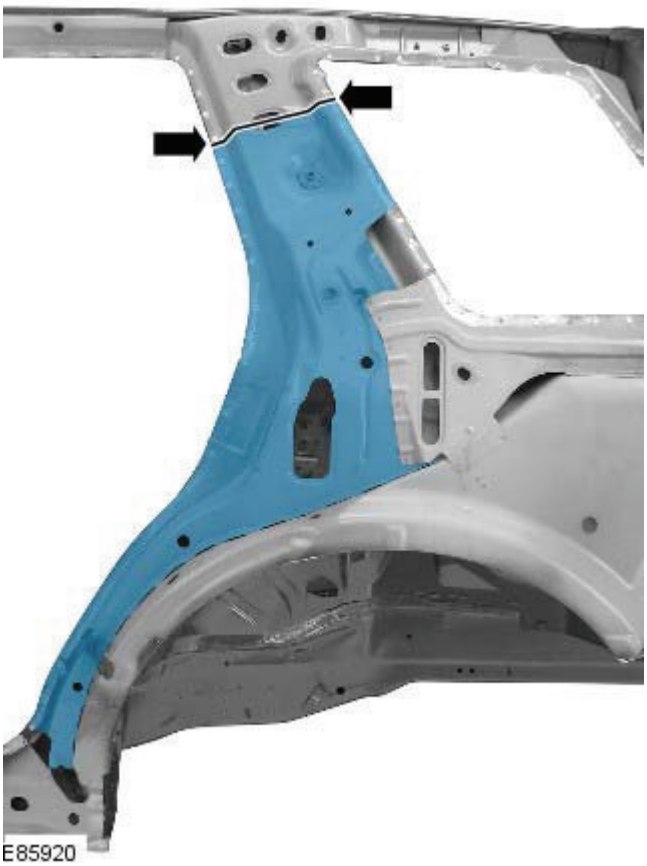

16. Dress all welded joints.

17. The installation of associated panels and mechanical components is the reverse of removal.

Published: 11-May-2011

Rear End Sheet Metal Repairs - Rear Inner Quarter Panel

Removal and Installation

Removal

• NOTE: The rear inner quarter panel is to be unpicked from the inner quarter panel, it is not serviced separately.

1. The rear inner quarter panel is replaced in conjunction with:
   - Rear bumper cover
   - Quarter panel
   - Rear door
   - Quarter glass
2. For additional information relating to this repair procedure please see the following:
   For additional information, refer to: Body and Frame (501-26 Body Repairs - Vehicle Specific Information and Tolerance Checks, Description and Operation) / Standard Workshop Practices (100-00 General Information, Description and Operation).
3. Remove the quarter panel.
   For additional information, refer to: Quarter Panel (501-30 Rear End Sheet Metal Repairs, Removal and Installation).
4. Mill out the spot welds.

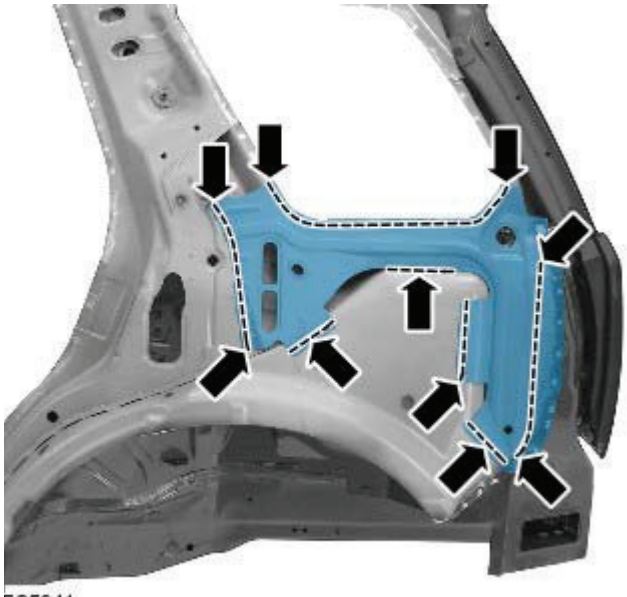

E85941

5. Separate the joints and remove the old panel, also releasing the NVH element.

Installation

1. Remove the rear inner quarter panel from the inner quarter service panel, mill out 5 spot welds.
2. Prepare the old and new panel joint surfaces.
3. Drill holes in the new panel ready for MIG plug welding.

E85942

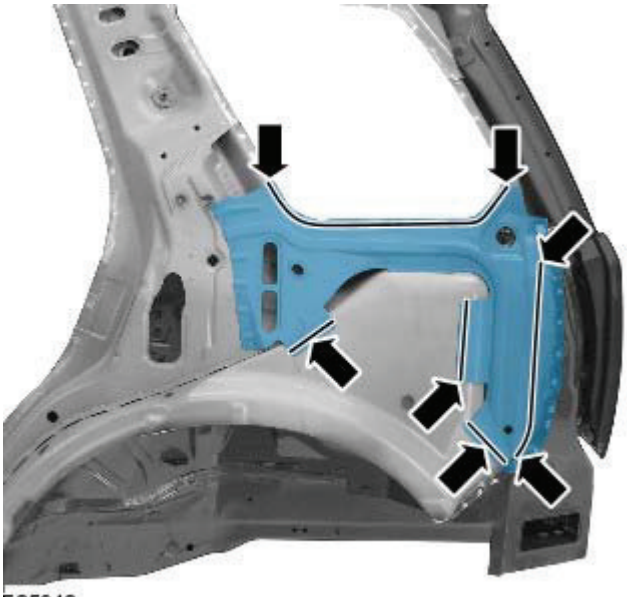

E85943

4. Spot weld.

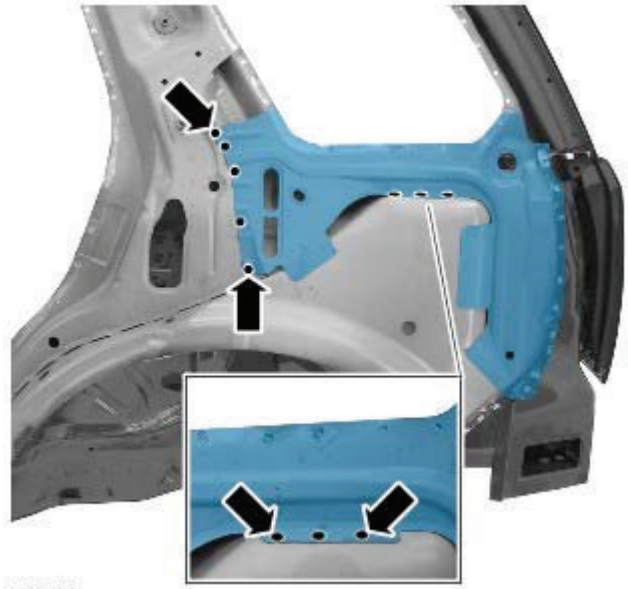

E85944

5. MIG plug weld.

6. Dress all welded joints.

7. The installation of associated panels and mechanical components is the reverse of removal.

Published: 11-May-2011

Rear End Sheet Metal Repairs - Inner Quarter Panel and Wheelhouse

Removal and Installation

Removal

• NOTE: The inner quarter panel and wheelhouse is an assembly of the inner quarter panel, rear wheelhouse inner, rear wheelhouse outer and the rear lamp mounting panel.

• NOTE: The service panel is not fully welded.

• NOTE: The panel is sectioned to avoid disturbing the roof panel.

1. The inner quarter panel and wheelhouse is replaced in conjunction with:

- Rear bumper cover
- Rear bumper
- Quarter panel
- Rear door
- Quarter glass
- Rear subframe and suspension assembly

2. For additional information relating to this repair procedure please see the following:
For additional information, refer to: Body and Frame (501-26 Body Repairs - Vehicle Specific Information and Tolerance Checks, Description and Operation) / Standard Workshop Practices (100-00 General Information, Description and Operation).

3. Remove the quarter panel.
For additional information, refer to: Quarter Panel (501-30 Rear End Sheet Metal Repairs, Removal and Installation).

4. Remove the rear subframe / suspension as an assembly.

5. Remove the brake pipe.

6. RH Only: Release and lay aside the fuel vent hose.

7. Remove the rear seat backrest.
For additional information, refer to: Front Seat Backrest Heater Mat (501-10 Seating, Removal and Installation).

8. Release and lay aside the wiring harness.

9. Mill out the spot welds.

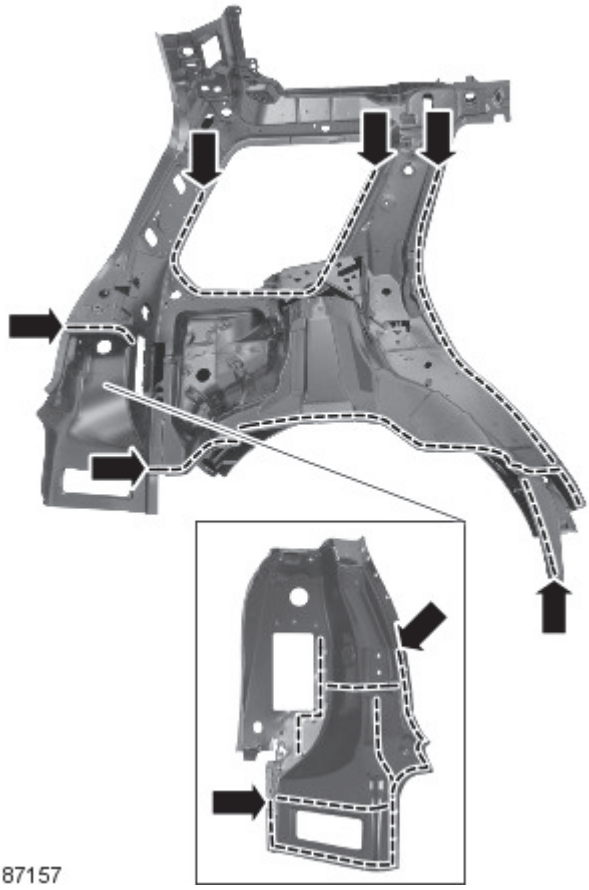

E87157

10. NOTE: Ensure there is a 50mm minimum stagger between the butt joints.

Saw cut the old panel at the points illustrated, using the new panel for reference, ensuring that the new panel overlaps.

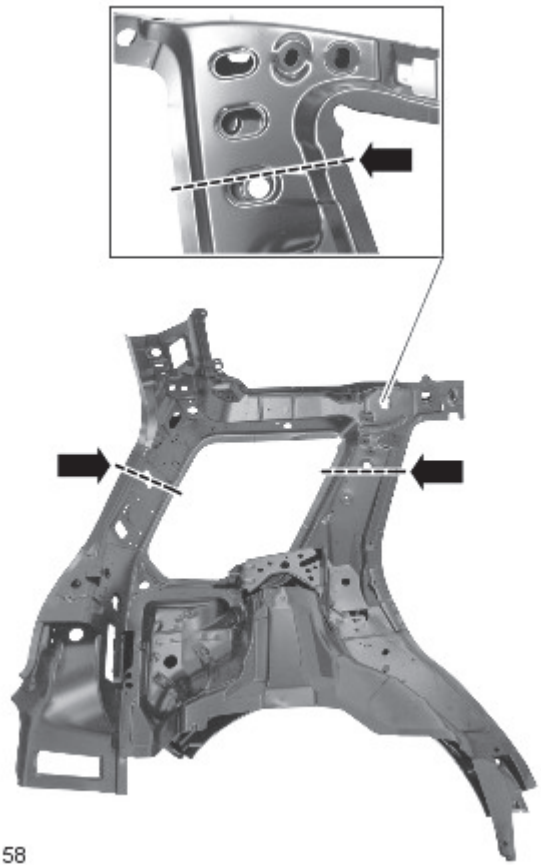

E87158

11. Separate the joints and remove the old panel, also releasing the NVH elements.

Installation

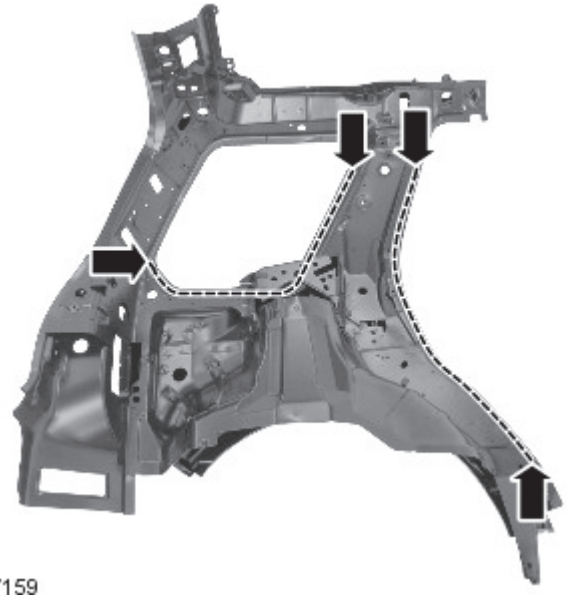

E87159

1. Prepare the new panel in the areas where it is not fully welded and spot weld.

2. Prepare the old and new panel joint surfaces.

3. Drill holes in the new panel ready for MIG plug welding.

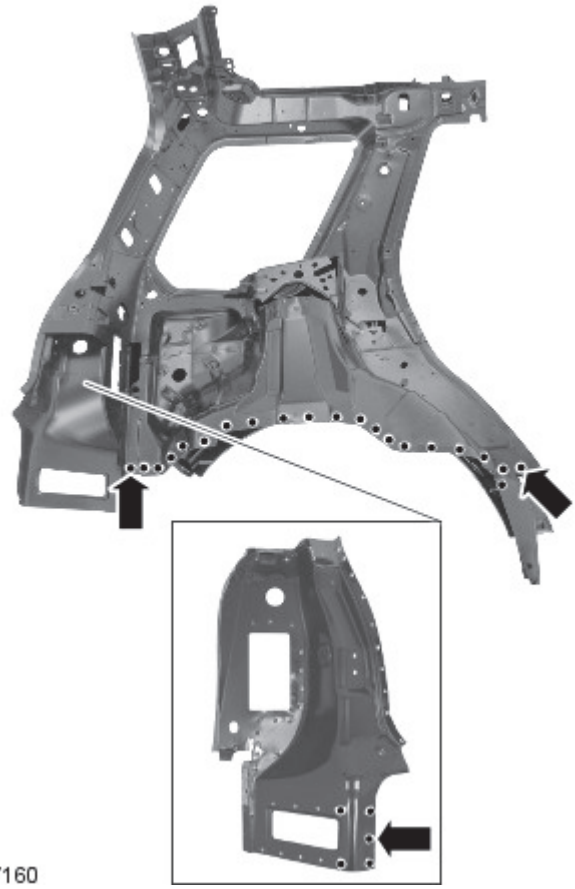

E87160

4. Offer up the new panel and clamp into position. Check alignment, if correct, proceed to next step, if not, rectify and recheck before proceeding.

5. Remove the new panel.

6. Apply adhesive to the areas illustrated.

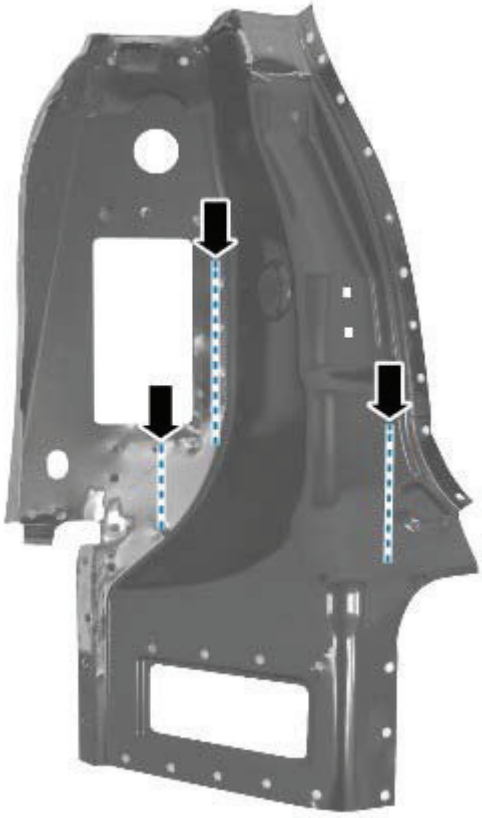

E87161

7. If necessary, renew the NVH element(s).
8. Apply sealer adhesive to the NVH elements.
9. Offer up the new panel and clamp into position.
10. With panels clamped into position, tack weld the butt joints.

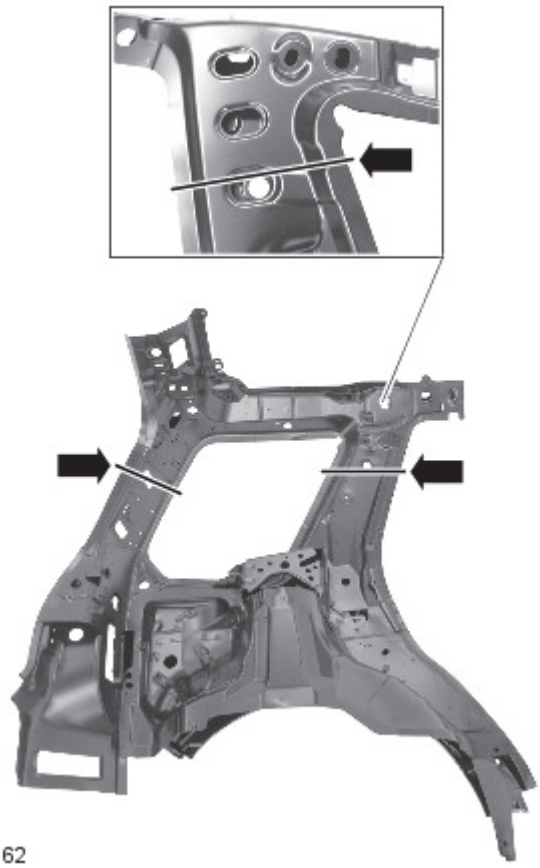

E87162

11. Dress the tack welds.

12. MIG weld the butt joints.

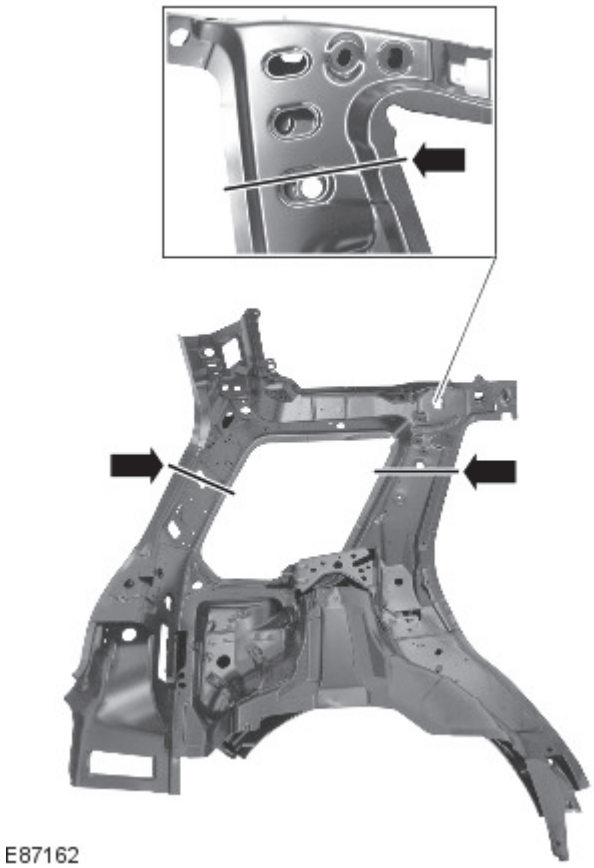

E87162

13. MIG plug weld.

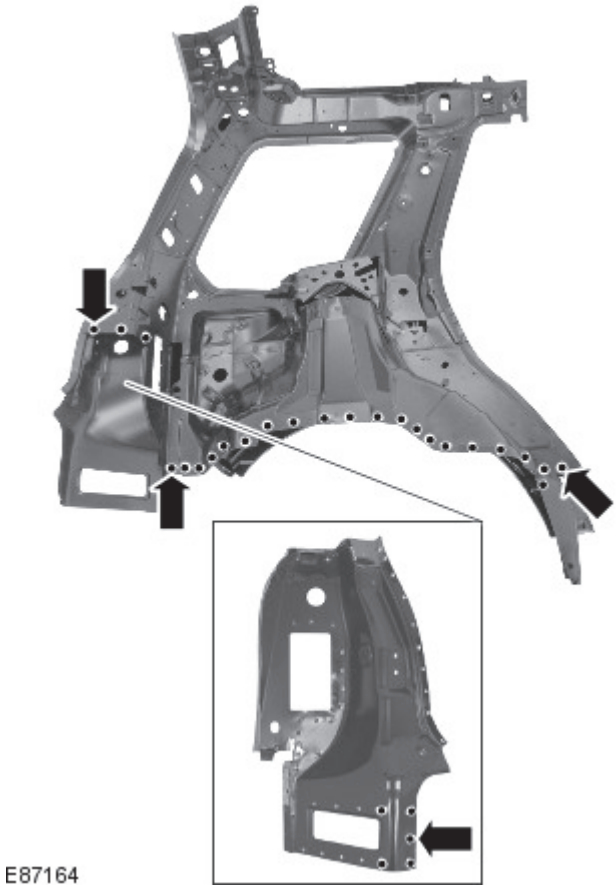

E87164

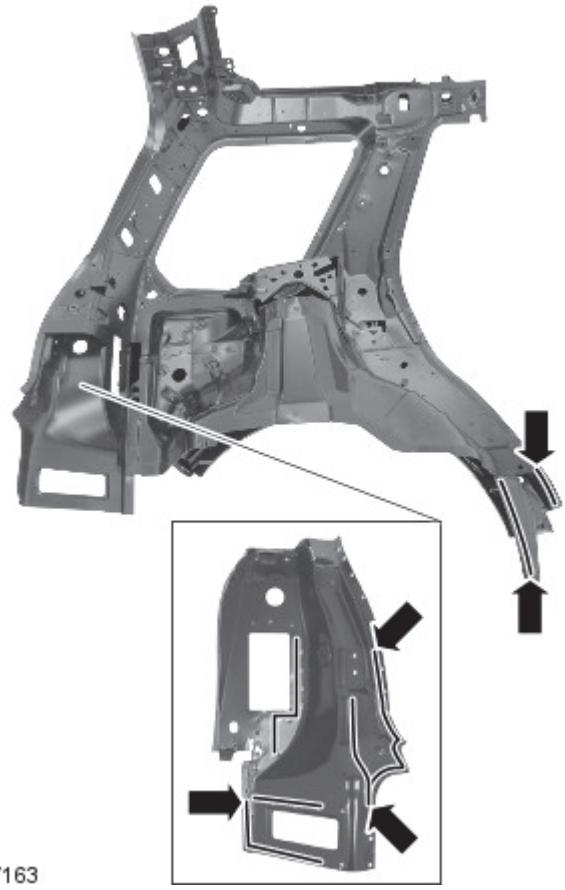

14. Spot weld.

15. Dress all welded joints.

16. The installation of associated panels and mechanical components is the reverse of removal.

Published: 11-May-2011

Rear End Sheet Metal Repairs - Inner Back Panel Assembly

Removal and Installation

Removal

• NOTE: The inner back panel assembly is serviced as a separate weld-on panel.

• NOTE: The panel is serviced less its weld studs.

• NOTE: There are NVH elements attached to the panel, they are not serviced on the new panel. If damaged, new elements will be required.

• NOTE: It is necessary to remove the back panel and both rear lamp mounting panels to enable removal and refitment of the inner back panel.

1. The inner back panel assembly is replaced in conjunction with:

- Rear bumper cover
- Rear bumper armature
- Back panel
- Both rear lamp mounting panels

2. For additional information relating to this repair procedure please see the following:
For additional information, refer to: Body and Frame (501-26 Body Repairs - Vehicle Specific Information and Tolerance Checks, Description and Operation) / Standard Workshop Practices (100-00 General Information, Description and Operation).

3. Remove both rear lamp mounting panels.
For additional information, refer to: Rear Lamp Mounting Panel (501-30 Rear End Sheet Metal Repairs, Removal and Installation).

4. Remove the back panel.
For additional information, refer to: Back Panel Assembly (501-30, Removal and Installation).

5. Saw cut the old panel, at the points illustrated, to aid access to spot welds.

E87166

6. Mill out the spot welds.

E87167

7. Separate the joints and remove the old panel, also releasing the NVH elements.

Installation

1. Prepare the old and new panel joint surfaces.
2. Offer up the new panel and clamp into position. Check alignment, if correct, proceed to next step, if not, rectify and recheck before proceeding.
3. Remove the new panel.
4. Apply adhesive to the areas illustrated.

E87170

5. If necessary, renew the NVH elements.
6. Apply sealer adhesive to the NVH elements.

E87171

7. Offer up the new panel and clamp into position.
8. Spot weld.

E87168

9. MIG plug weld.

E87172

10. Install weld studs.

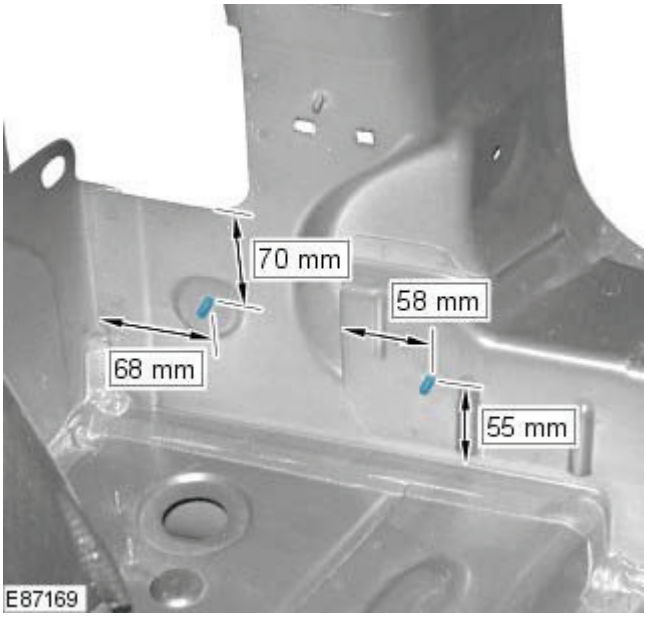

11. Dress all welded joints.

12. The installation of associated panels and mechanical components is the reverse of removal.

Published: 11-May-2011

Rear End Sheet Metal Repairs - Rear Side Member Upper Side Extension

Removal and Installation

Removal

• NOTE: The rear side member upper side extension is serviced as a separate weld on panel, it is also serviced on the rear side member.

• NOTE: The panel is serviced less its weld studs.

1. The rear side member upper side extension is replaced in conjunction with:
   - Rear bumper cover
   - Rear bumper armature
   - Rear lamp mounting panel
   - Rear side member lower side extension
2. For additional information relating to this repair procedure please see the following:
   For additional information, refer to: Body and Frame (501-26 Body Repairs - Vehicle Specific Information and Tolerance Checks, Description and Operation) / Standard Workshop Practices (100-00 General Information, Description and Operation).
3. Remove the rear side member lower side extension.
   For additional information, refer to: Rear Side Member Lower Side Extension (501-30 Rear End Sheet Metal Repairs, Removal and Installation).
4. Mill out the spot welds.

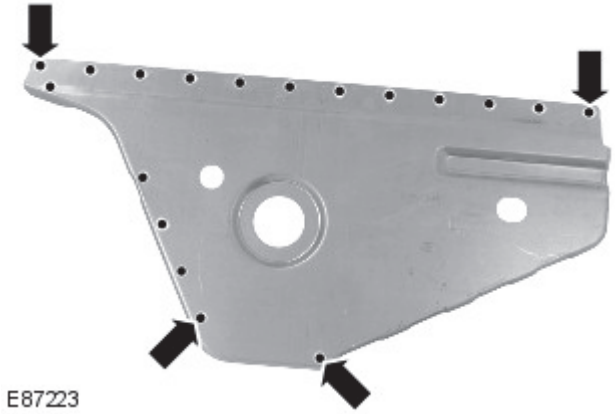

5. Separate the joints and remove the old panel.

Installation

1. Prepare the old and new panel joint surfaces.
2. Offer up the new panel and clamp into position. Check alignment, if correct, proceed to next step, if not, rectify and recheck before proceeding.
3. MIG plug weld.

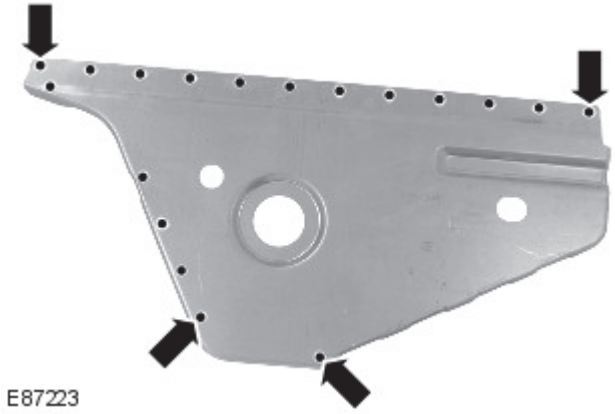

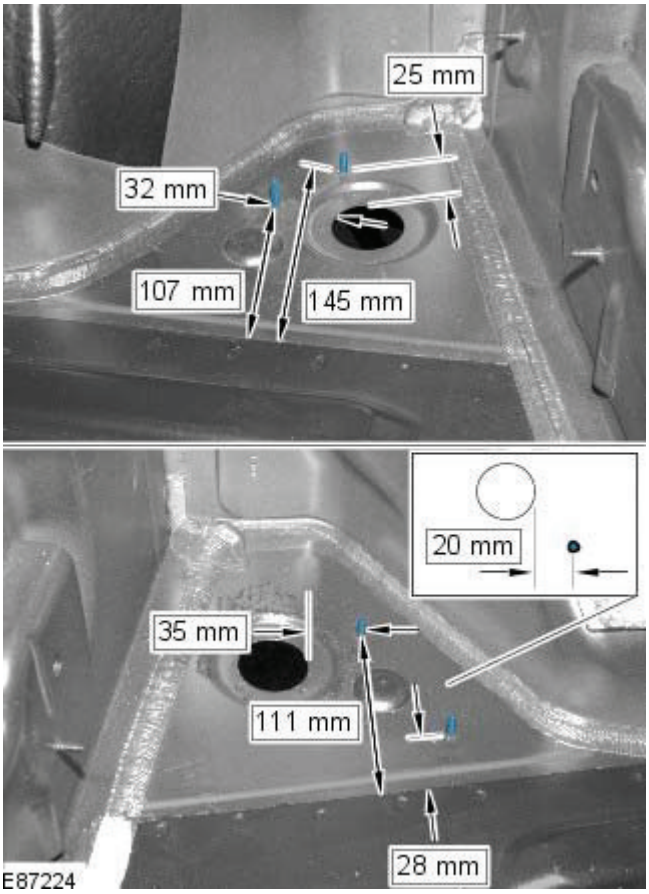

4. Install weld studs.

5. Dress all welded joints.

6. The installation of associated panels and mechanical components is the reverse of removal.

Published: 11-May-2011

Uni-Body, Subframe and Mounting System -

Description	Nm	lb-ft
Front subframe to body bolts*	140 + 240°	103 + 240°
Front subframe cross brace bolts*	45	33
Rear subframe bolts*	175	129
Trailing arm to body bracket bolts*	110	81

*** New nuts/bolts must be fitted**

Published: 11-May-2011

Uni-Body, Subframe and Mounting System - Front Subframe

Removal and Installation

Special Tool(s)

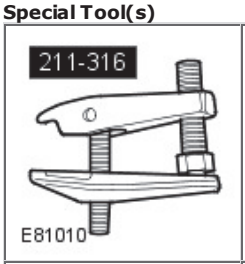	211-316 Separator, Ball Joint
	502-012 Alignment Pins, Subframe

General Equipment

Powertrain Jack

Removal

1. **1.** WARNING: Make sure to support the vehicle with axle stands.

   Raise and support the vehicle.

2. Siphon the fluid from the power steering reservoir.

3. Remove the front road wheels and tires.

   Refer to: Wheel and Tire (204-04 Wheels and Tires, Removal and Installation).

4. Remove the engine undershield.

   Refer to: Engine Undershield (501-02 Front End Body Panels, Removal and Installation).

5. Disconnect the LH catalyst monitor sensor electrical connector.

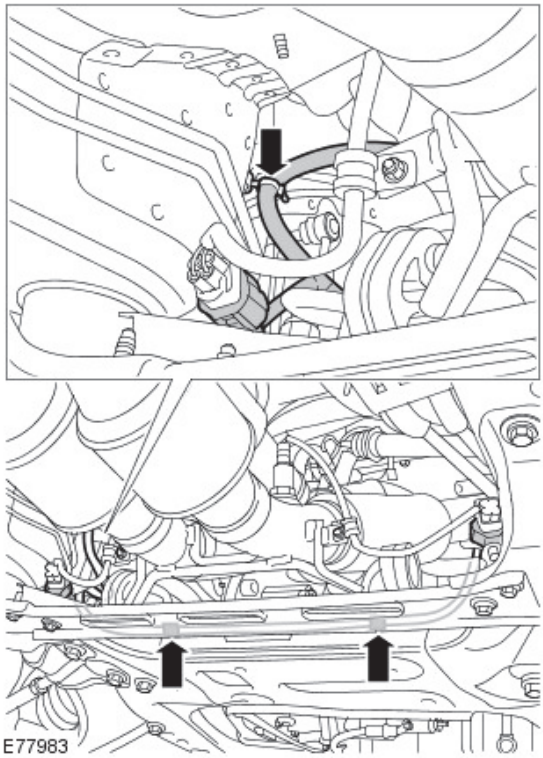

6. Disconnect the RH catalyst monitor sensor electrical connector.

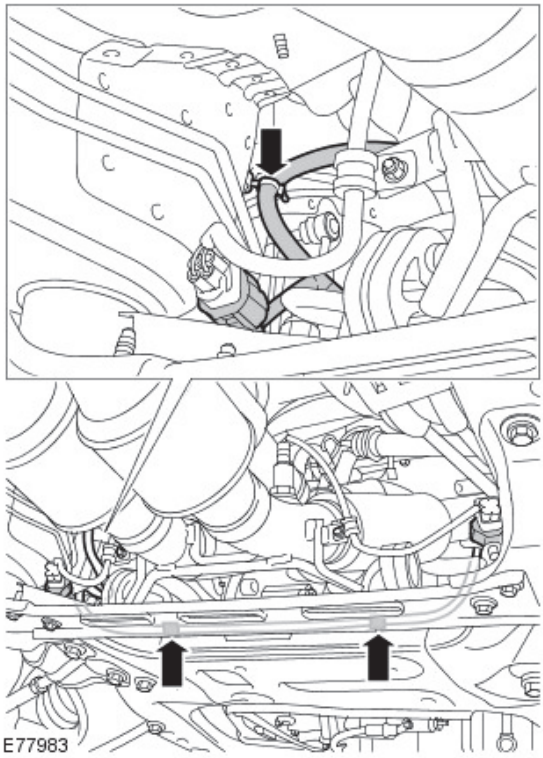

7. Release the catalyst monitor sensor wiring harness.

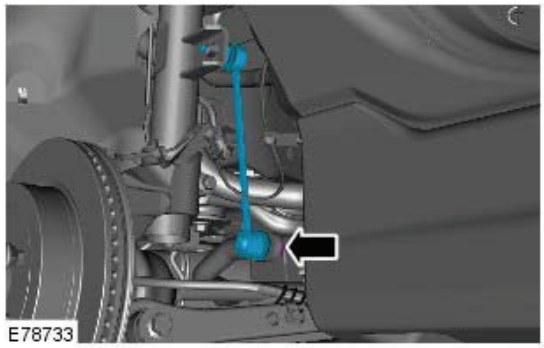

8. **8.** CAUTION: Make sure that the ball joint ball does not rotate.

   Disconnect both front stabilizer bar links from the lower suspension arm.

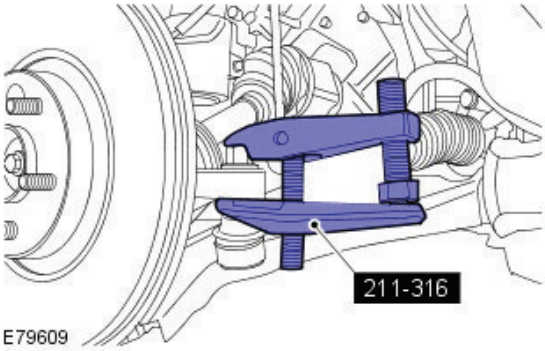

E79609

9. Using the special tool, release the LH and RH tie-rod end ball joints.

   Special Tool(s): 211-316

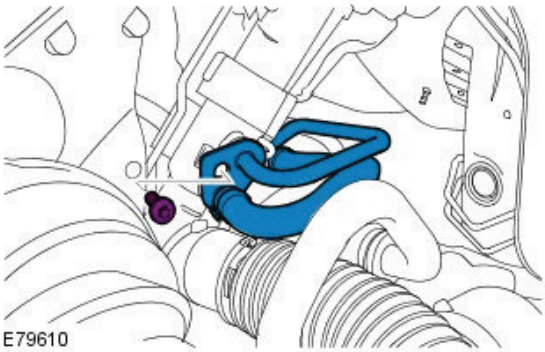
E79610

10. **10.** CAUTION: Be prepared to collect escaping fluids.

    • NOTE: Make sure that all openings are sealed.

    Disconnect the pressure lines from the power steering gear.

11. Release the PAS lines.

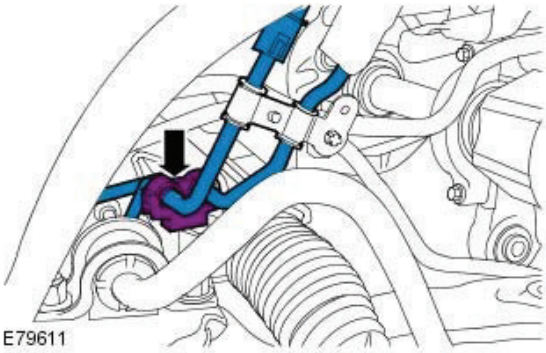
E79611

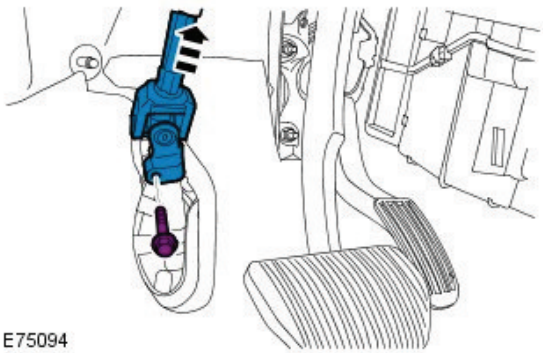
E75094

12. **12.** WARNING: Make sure that a new steering column flexible coupling bolt is installed.

    Disconnect the lower steering column from the steering gear.

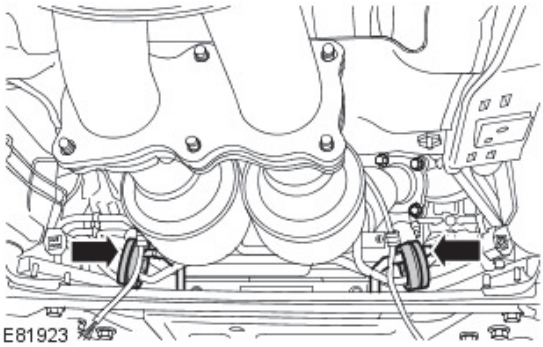

13. Release the downpipe catalytic converters.

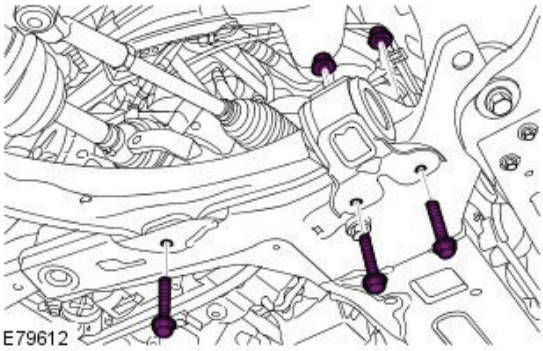

14. Release the LH and RH lower suspension arms.

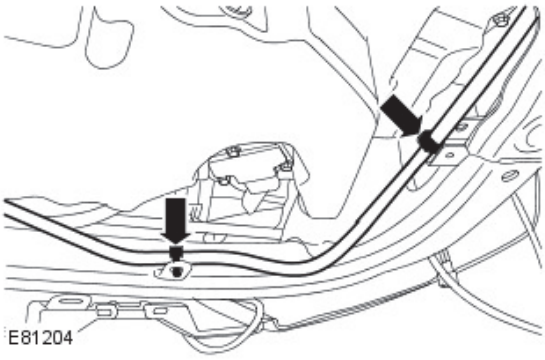

15. Release the purge line from the subframe.

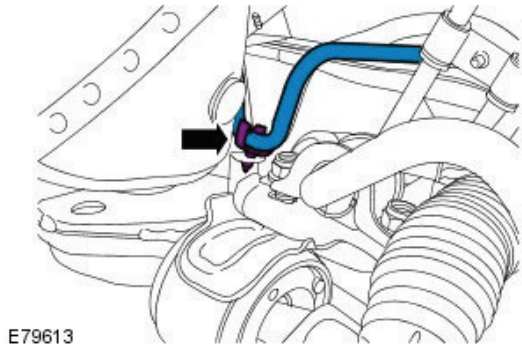

16. Release the fuel line.

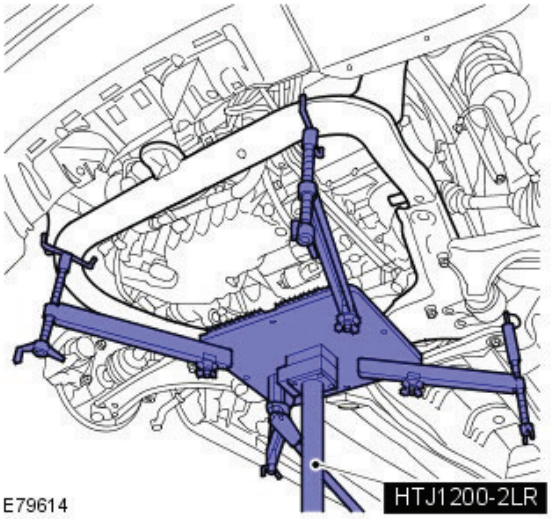

E79614

17. Support the subframe.

    General Equipment: Powertrain Jack

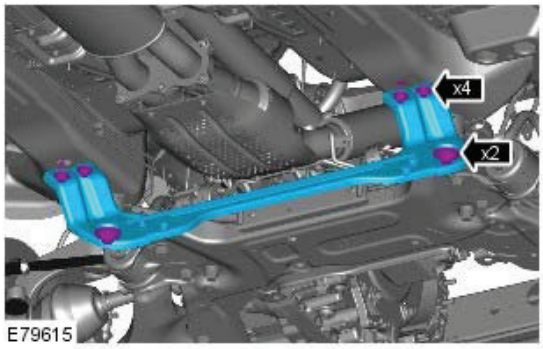

E79615

18. **18.** CAUTION: Make sure that new subframe bolts are installed.

    Remove the front subframe cross-brace.

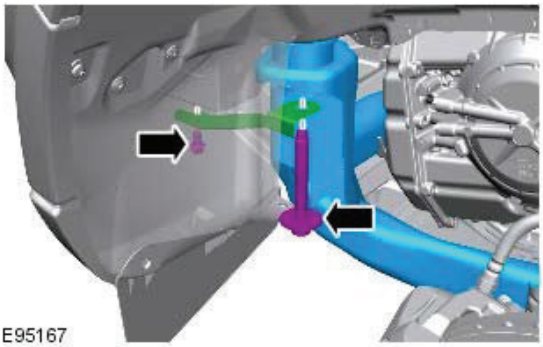
E95167

19. **19.** CAUTIONS:

    Mark the components to aid installation.

    Make sure that new subframe bolts are installed.

    Lower the front subframe assembly.

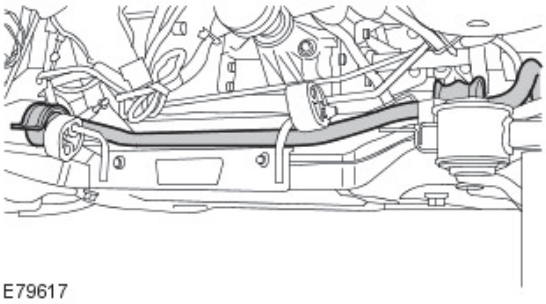
E79617

20. Remove the stabilizer bar.

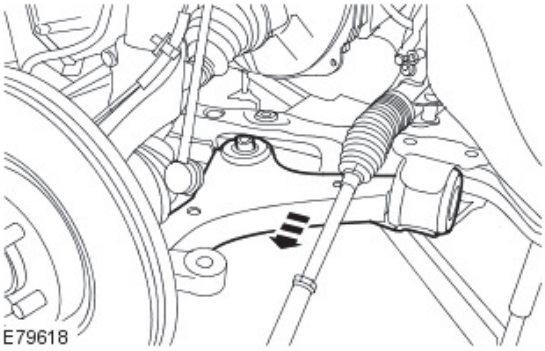

21. Release the LH and RH suspension arms, as the subframe is lowered, and tie them aside.

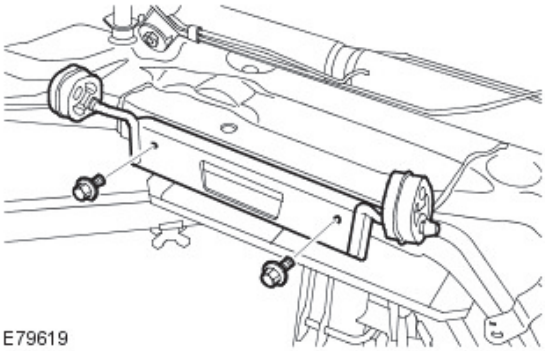

22. **22.** NOTE: Do not disassemble further if the component is removed for access only.

    Remove the catalyst support bracket.

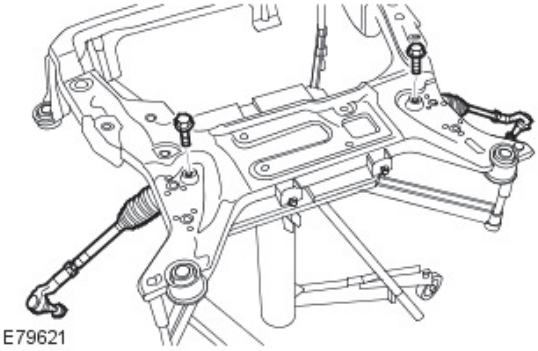

23. Remove the steering gear.

Installation

1. Install the steering gear.

   Torque: 105 Nm

2. Using the special tool, support the subframe.

3. **3.** CAUTION: Install all the bolts finger tight before final tightening.

   Raise the front subframe to allow installation of the suspension arms and the bolts.

4. Install the LH and RH suspension arms as the subframe is raised.

5. Install the stabilizer bar.

6. **6.** CAUTION: Make sure that new bolts are installed.

   Install the subframe cross-brace.

   Torque: 45 Nm

7. **7.** CAUTION: Make sure that new bolts are installed.

- Install the 2 support brackets.

  Torque: 25 Nm

8. Install the front subframe.

   Special Tool(s): 502-012
   Torque:
   Stage 1: 140 Nm
   Stage 2: 240°

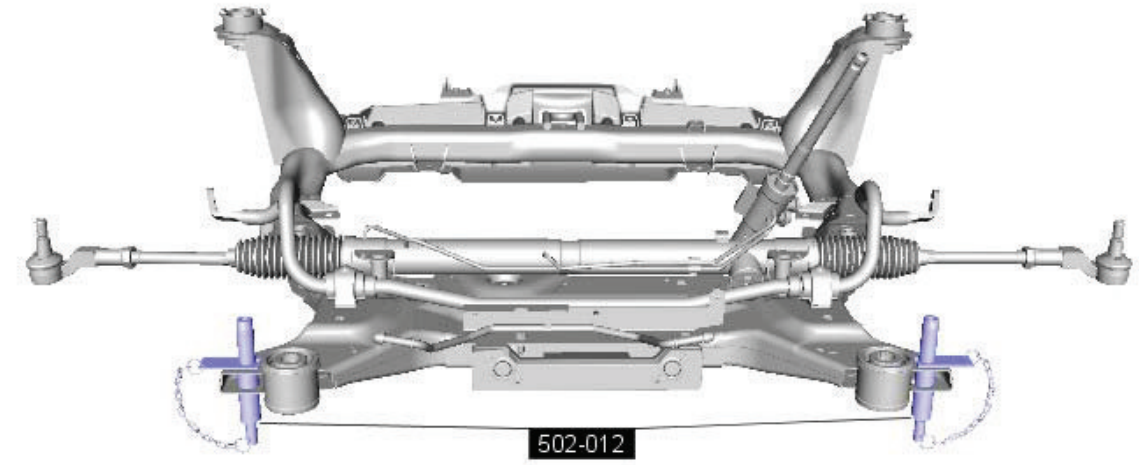

E133121

9. Install the catalyst support bracket.

   Torque: 10 Nm

10. Install the fuel line.

11. Install the purge line.

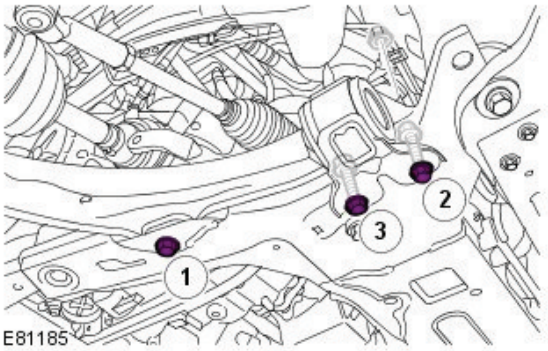

E81185

12.
   - Tighten bolt 1.

     Torque:
     Stage 1: 140 Nm
     Stage 2: 45°
   - Tighten bolt 2 to

     Torque: 175 Nm
   - Tighten bolt 3 to

     Torque: 175 Nm

13. Secure the catalytic converters.

14. **14.** WARNING: Make sure that new nuts are installed.

    Connect the LH and RH tie-rod end ball joints.

    Torque: 105 Nm

15. Connect the steering gear pressure lines.

    Torque: 25 Nm

16. **16.** WARNING: Make sure that new nuts are installed.

    CAUTION: Make sure that the ball joint ball does not rotate.

    Install the stabilizer link bar to the lower suspension arm, and tighten to 55 Nm (41 lb.ft)

17. Secure the electrical harness.

18. **18.** WARNING: Make sure that a new steering column flexible coupling bolt is installed.

    Connect the steering column to the steering gear.

    Torque: 25 Nm

19. Connect and secure the catalyst monitor sensor electrical connectors.

20. Install the 2 subframe mounting bolts and remove the jack.

21. Install the engine undershield.

    Refer to: Engine Undershield (501-02 Front End Body Panels, Removal and Installation).

22. Install the wheels and tires.

    Refer to: Wheel and Tire (204-04 Wheels and Tires, Removal and Installation).

23. Refill and bleed the power steering.

    Refer to: Power Steering System Bleeding (211-00 Steering System - General Information, General Procedures).

24. Using only four wheel alignment equipment approved by Land Rover, check and adjust the wheel alignment.

Published: 11-May-2011

Uni-Body, Subframe and Mounting System - Front Subframe Front Bushing

Removal and Installation

Special Tool(s)

	204-598 Hydraulic Cylinder 10t
	204-598-01 Remover/Installer, Subframe Bushing Guide

Removal

1. Remove the cover and disconnect the battery ground cable.

   Refer to: Specifications (414-00 Battery and Charging System - General Information, Specifications).

2. **2.** WARNING: Make sure to support the vehicle with axle stands.

   Raise and support the vehicle.

3. Remove the front subframe assembly.

   Refer to: Front Subframe (502-00 Uni-Body, Subframe and Mounting System, Removal and Installation).

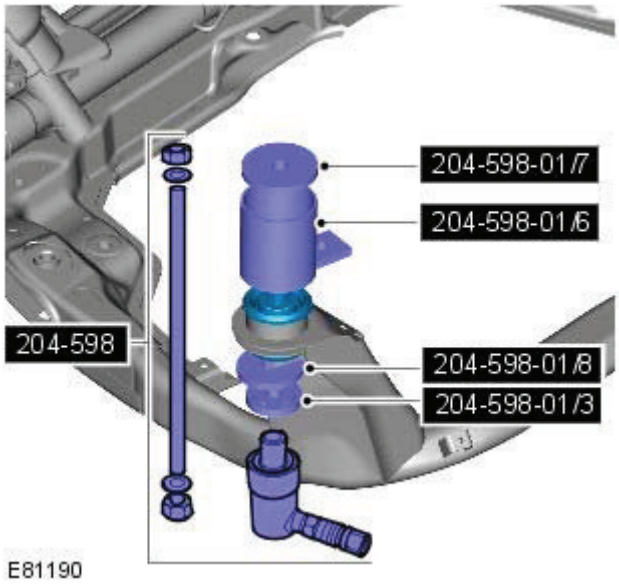

4. **4.** CAUTION: Mark the components to aid installation.
   - Remove the bushing.

     Special Tool(s): 204-598, 204-598-01
   - Special tool 204-598-01/8 is used to start the bushing removal process, and must be removed after the bushing has released, as it will not pass through the sub-frame bushing aperture.

Installation

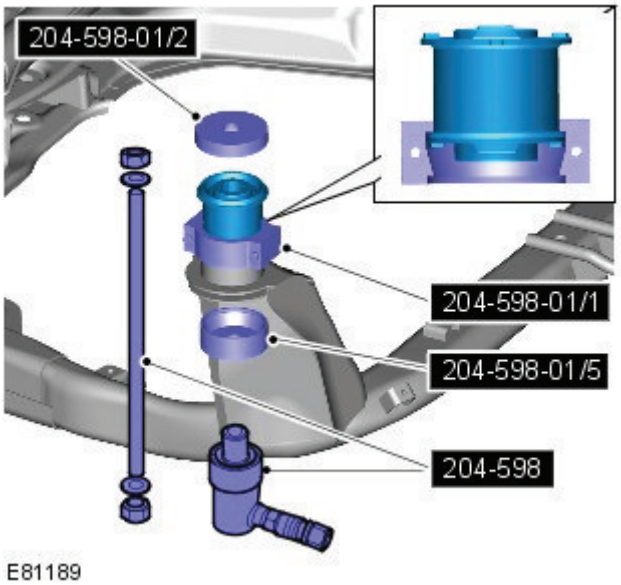

1. **1.** CAUTION: Make sure that the component aligns with the installation mark.

   Install the bushing.

   Special Tool(s): 204-598, 204-598-01

2. Install the front subframe.

   Refer to: Front Subframe (502-00 Uni-Body, Subframe and Mounting System, Removal and Installation).

3. Connect the battery ground cable and install the cover.

   Refer to: Specifications (414-00 Battery and Charging System - General Information, Specifications).

Published: 11-May-2011

Uni-Body, Subframe and Mounting System - Front Subframe Rear Bushing

Removal and Installation

Special Tool(s)

 E75373	204-598 Hydraulic Cylinder 10t
 E73708	204-598-01 Remover/Installer, Subframe Bushing Guide

Removal

1. Remove the cover and disconnect the battery ground cable.

   Refer to: Specifications (414-00 Battery and Charging System - General Information, Specifications).

2. **2.** WARNING: Make sure to support the vehicle with axle stands.

   Raise and support the vehicle.

3. Remove the front subframe assembly.

   Refer to: Front Subframe (502-00 Uni-Body, Subframe and Mounting System, Removal and Installation).

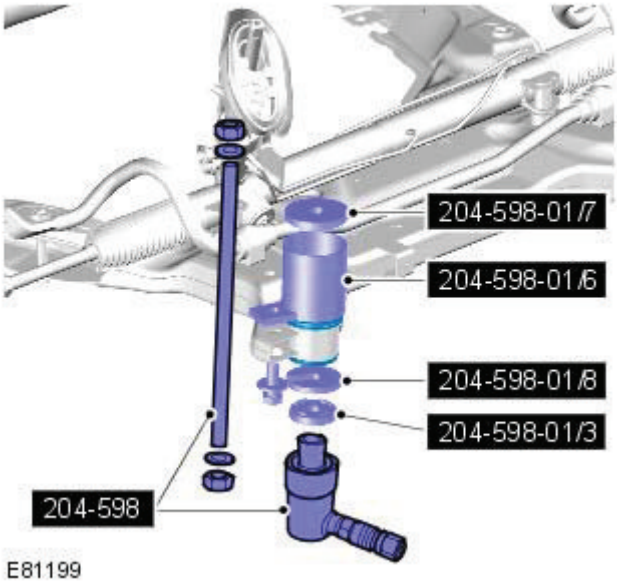

4. **4.** CAUTION: Mark the components to aid installation.

   - Special tool 204-598-01/8 is used to start the bushing removal process, and must be removed after the bushing has released, as it will not pass through the sub-frame bushing aperture.
   - Remove the bushing.

   Special Tool(s): 204-598, 204-598-01

Installation

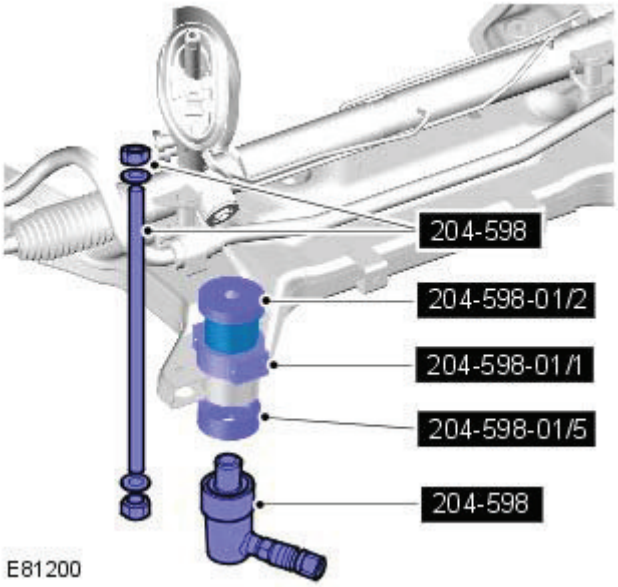

1. **1.** CAUTION: Make sure that the component aligns with the installation mark.

   Install the bushing.

   Special Tool(s): 204-598, 204-598-01

2. Install the front subframe.

   Refer to: Front Subframe (502-00 Uni-Body, Subframe and Mounting System, Removal and Installation).

3. Connect the battery ground cable and install the cover.

   Refer to: Specifications (414-00 Battery and Charging System - General Information, Specifications).

Published: 11-May-2011

Uni-Body, Subframe and Mounting System - Rear Subframe

Removal and Installation

General Equipment

Powertrain Jack

Removal

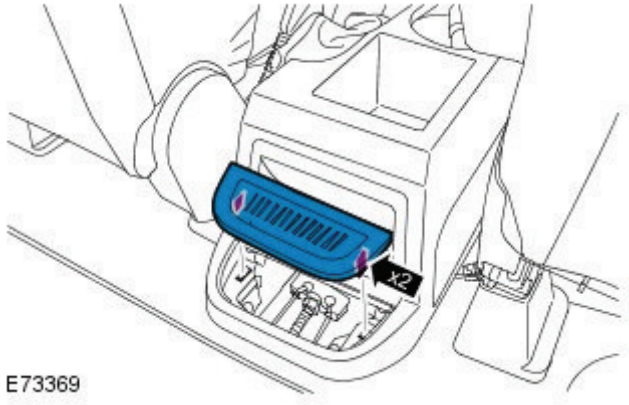

1.

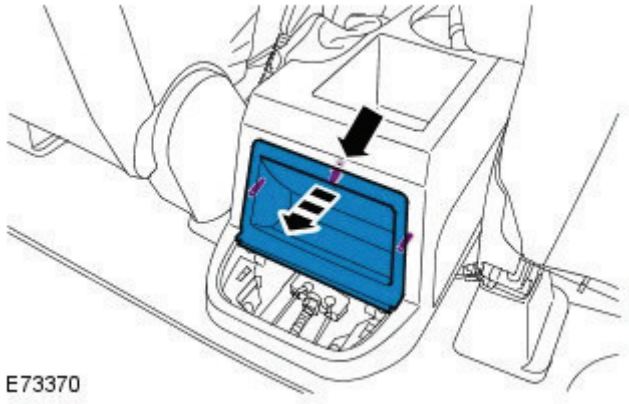

2. Remove the stowage compartment.

3. **3.** NOTE: Use an additional wrench to prevent the component from rotating.

   Remove the adjusting nut and disconnect the front parking brake cable.

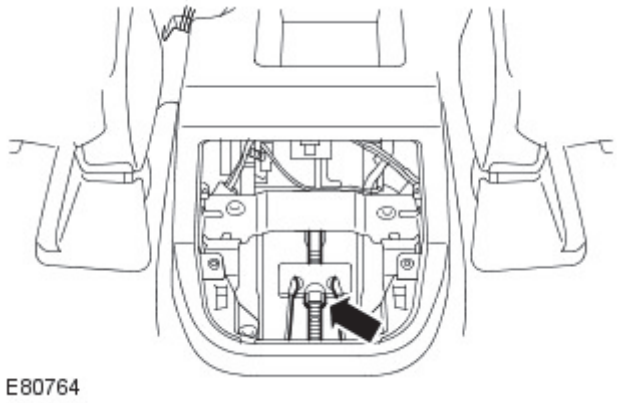

4. Release the rear parking brake cables and remove the compensator.

5. Remove the rear quarter trim panels.

   Refer to: Rear Quarter Trim Panel (501-05 Interior Trim and Ornamentation, Removal and Installation).

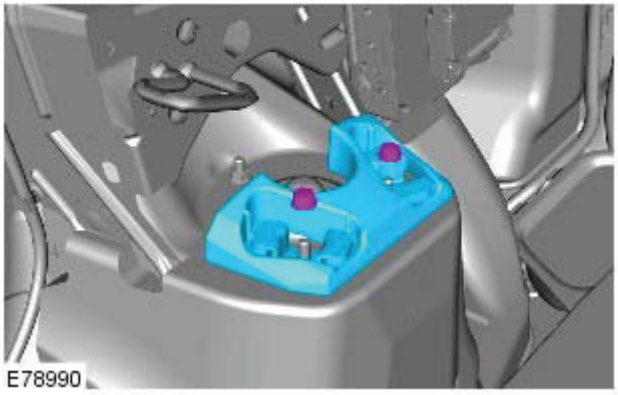

6.

7. Repeat the above procedure on the opposite hand.

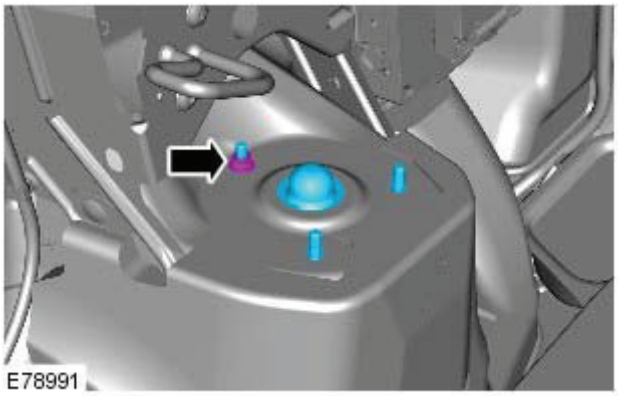

8.

9. Repeat the above procedure on the opposite hand.

10. **10.** WARNING: Make sure to support the vehicle with axle stands.

    Raise and support the vehicle.

11. Remove both rear wheels and tires.

    Refer to: Wheel and Tire (204-04 Wheels and Tires, Removal and Installation).

12. If installed, remove the rear suspension height sensor.

    Refer to: Rear Suspension Height Sensor (204-05 Vehicle Dynamic Suspension, Removal and Installation).

13. Remove the rear muffler.

    Refer to: Exhaust System (309-00B Exhaust System - TD4 2.2L Diesel, Removal and Installation).

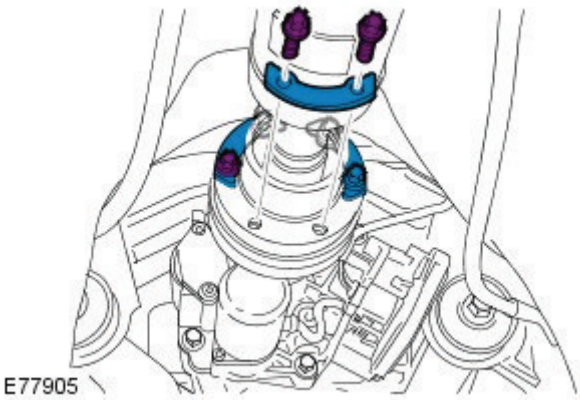

14. **14.** CAUTIONS:

Mark the position of the driveshaft flange in relation to the drive pinion flange.

To avoid damage to the joint or gaiter, do not allow the driveshaft to hang.

Discard the bolts.

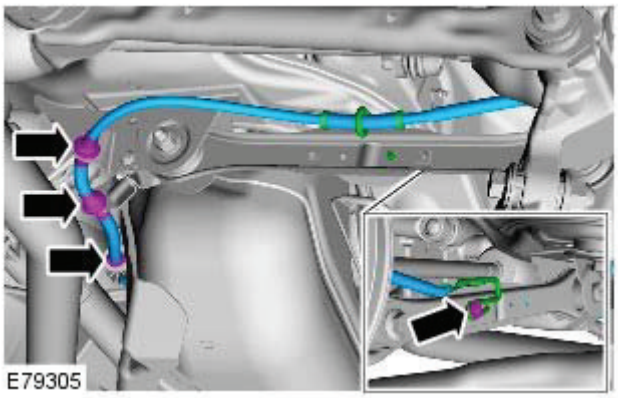

15.

16. Repeat the above procedure on the opposite hand.

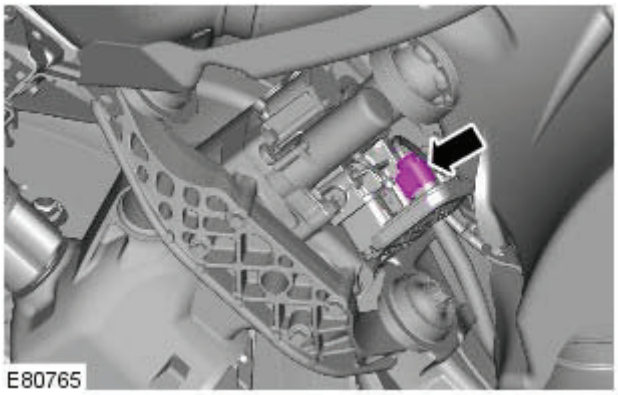

17.

18.

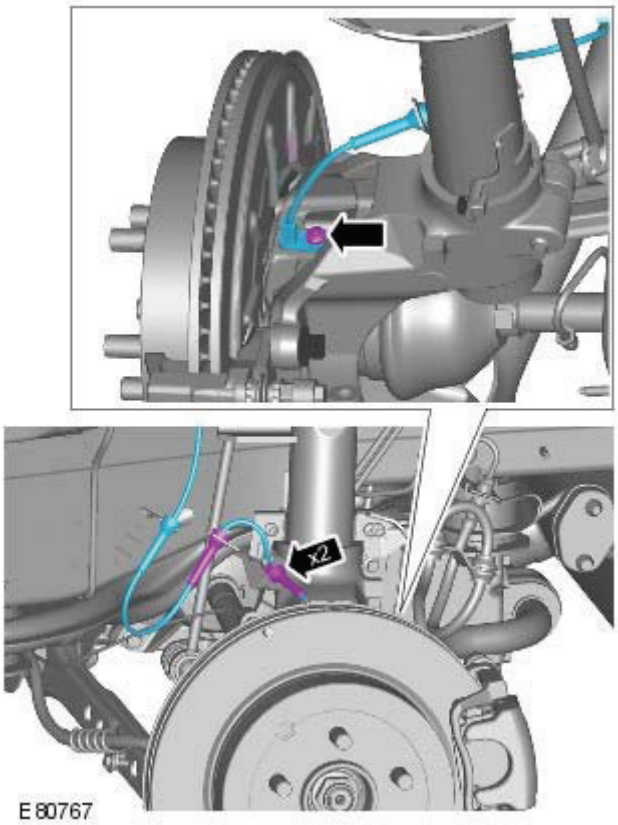

19. Repeat the above procedure on the opposite hand.

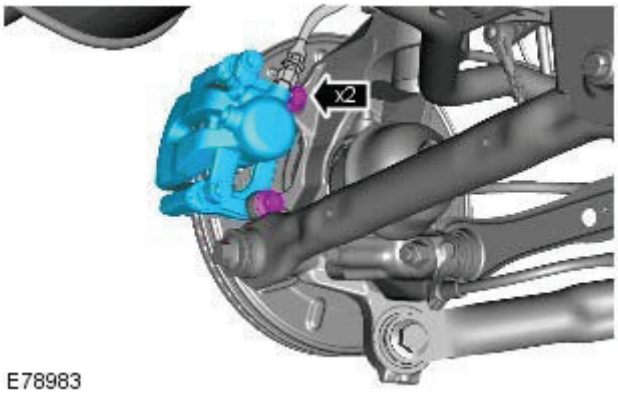

20. **20.** CAUTION: Make sure that no load is placed on the brake hose.

    Tie the rear brake caliper aside.

21. Repeat the above procedure on the opposite hand.

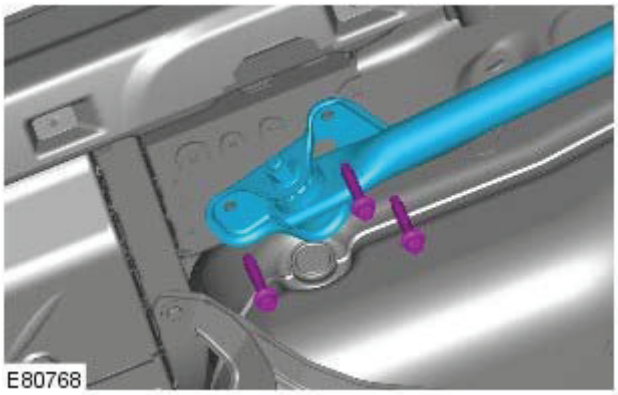

22. **22.** CAUTION: Make sure the bushing(s) or isolator(s), are not strained or left unsupported during this procedure.

    Release the trailing arm to body bracket.

23. Repeat the above procedure on the opposite hand.

24. Support the subframe.

    General Equipment: Powertrain Jack

25.

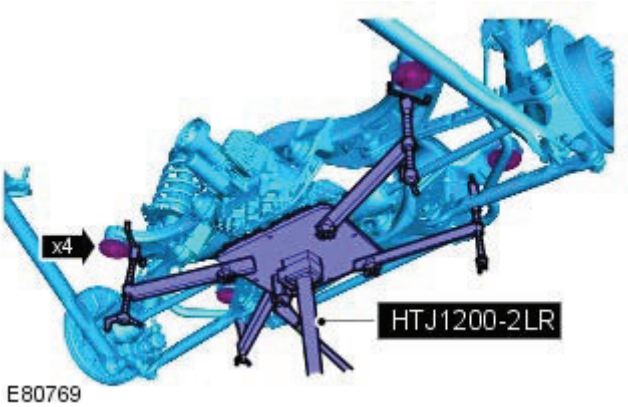

E80769

26. Carefully lower the subframe for access to the differential breather lines.

27.

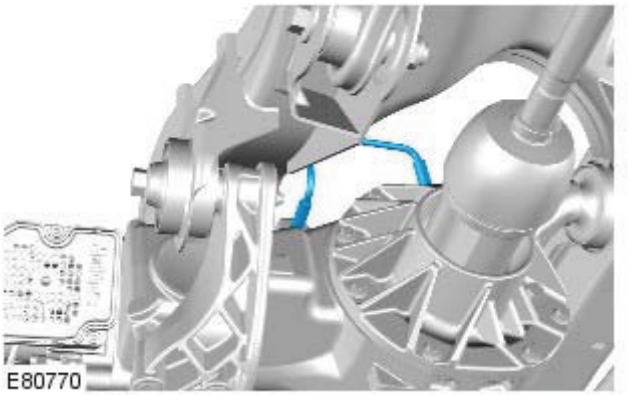
E80770

28. **28.** CAUTION: Make sure that no components catch.

    With assistance, remove the rear subframe assembly.

29. **29.** NOTE: Do not disassemble further if the component is removed for access only.

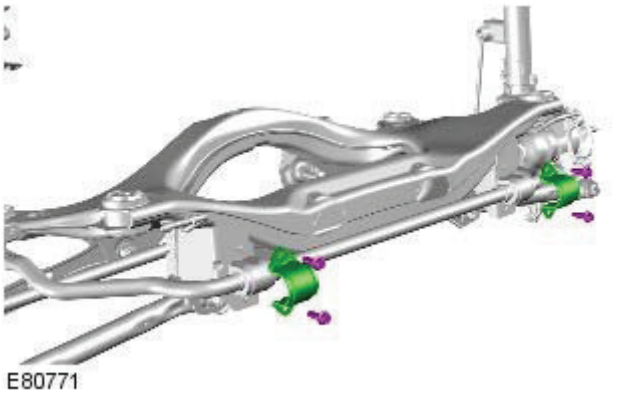
E80771

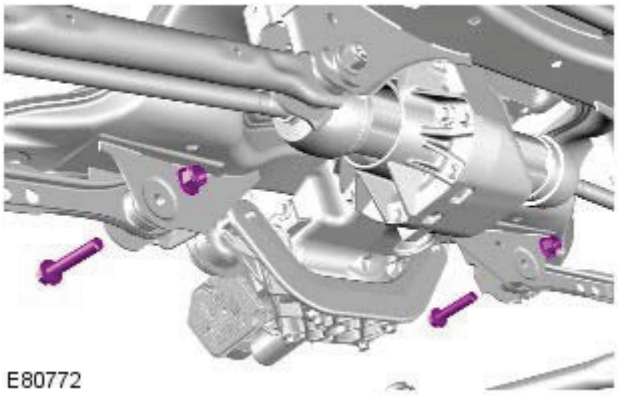
E80772

30.

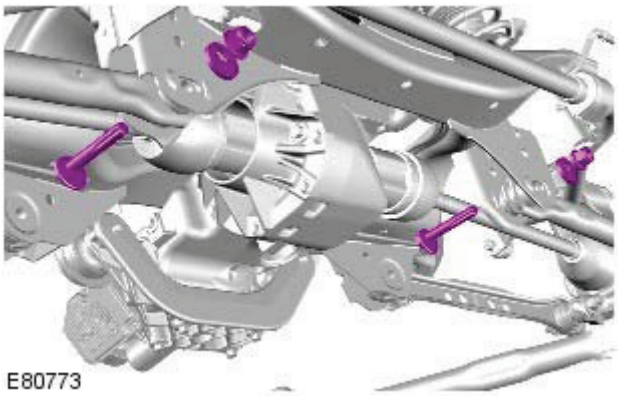
E80773

31.

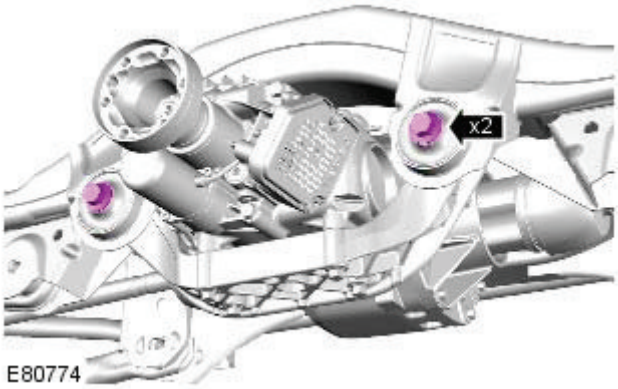

E80774

32. Discard the bolts.


E80775

33. Discard the bolts.

34. With assistance, remove the rear subframe.

Installation

1. **1.** CAUTION: Make sure that new bolts are installed.

   - Clean the component mating faces.
   - With assistance, install the subframe.
   - With assistance, align and secure the differential.
   - Tighten the rear bolts.

     Torque: 110 Nm
   - Tighten the front bolts.

     Torque: 175 Nm

2. **2.** CAUTION: Make sure that new bolts are installed.

   Align the suspension arms to the subframe and install the bolts, do not fully tighten at this stage.

3. Using the special tool, support the subframe.

4. Connect the transmission breather lines.

5. **5.** CAUTIONS:

   Make sure that no components catch.

   Make sure that new bolts are installed.

   With assistance, position the subframe to the body and tighten the bolts.

   Torque: 175 Nm

6. **6.** CAUTION: Make sure that new bolts are installed.

   Install the stabilizer clamp bolts, but do not tighten fully at this stage.

7. Connect the Active On-demand Coupling module electrical connector.

8. Remove the powertrain jack.

   General Equipment: Powertrain Jack

9. **9.** CAUTION: Make sure that new bolts are installed.

   Install the trailing arm to body brackets.

   Torque: 110 Nm

10. **10.** CAUTION: Make sure that the brake hose is not twisted and is correctly located.

    - Clean the component mating faces.
    - Install the brake caliper anchor plate.

      Torque: 110 Nm
    - Repeat the above procedure for the other side.

11.
    - Secure the wheel speed sensor and lead.

Torque: 5 Nm
- Secure the lead in the clips.
- Repeat the above procedure for the other side.

12. LH side: Connect the ride height sensor electrical connector.

13.
- Position and secure the rear shock absorbers.
- Install both mass dampers.

Torque: 25 Nm
- Repeat the above procedure for the other side.

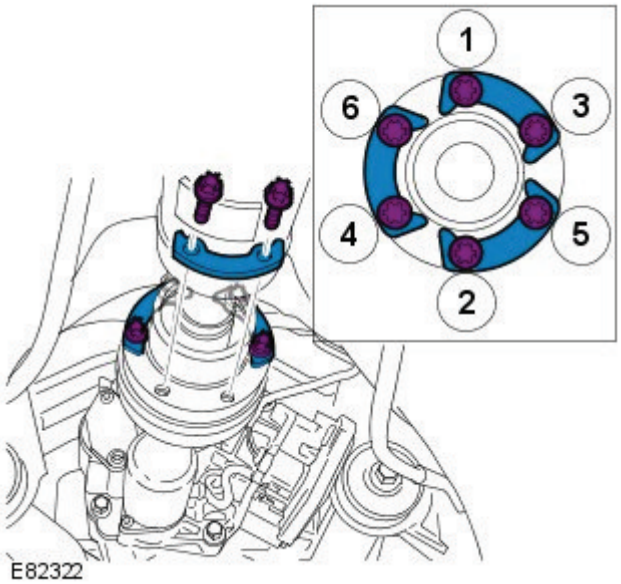

14. **14.** CAUTION: Make sure that new bolts are installed.
    - Clean the component mating faces.
    - Connect the driveshaft to the rear flange.

    Torque: 40 Nm

15. Install the parking brake cables to the guide tubes.

16. Connect the parking brake cables.

17. Adjust the parking brake.

    Refer to: Parking Brake Cable Adjustment (206-05 Parking Brake and Actuation, General Procedures).

18. Install the rear muffler.

    Refer to: Exhaust System (309-00B Exhaust System - TD4 2.2L Diesel, Removal and Installation).

19. Install the rear quarter trim panels.

    Refer to: Rear Quarter Trim Panel (501-05 Interior Trim and Ornamentation, Removal and Installation).

20. Install the rear suspension height sensor.

    Refer to: Rear Suspension Height Sensor (204-05 Vehicle Dynamic Suspension, Removal and Installation).

21. Install the wheels and tires.

    Refer to: Wheel and Tire (204-04 Wheels and Tires, Removal and Installation).

22. **22.** CAUTION: Nuts and bolts must be tightened with the weight of the vehicle on the suspension.

    Tighten the stabilizer bar clamp bolts.

    Torque: 60 Nm

23. **23.** CAUTION: Nuts and bolts must be tightened with the weight of the vehicle on the suspension.

    - Tighten the supsension arms to the subframe.

      Torque: 175 Nm
    - During installation, do not tighten the nuts and bolts until the 4 wheel alignment procedure has been carried out.

24. Carry out a complete vehicle geometry check and adjustment.

Published: 11-May-2011

Uni-Body, Subframe and Mounting System - Rear Subframe Front Bushing

Removal and Installation

Special Tool(s)

	204-598 Hydraulic Cylinder 10t
	204-598-01 Remover/Installer, Subframe Bushing Guide

Removal

• NOTE: Removal steps in this procedure may contain installation details.

1. **1.** WARNING: Make sure to support the vehicle with axle stands.

   Raise and support the vehicle.

2. Remove both rear wheels and tires.

   Refer to: Wheel and Tire (204-04 Wheels and Tires, Removal and Installation).

3. Remove the rear subframe assembly for access.

   Refer to: Rear Subframe (502-00 Uni-Body, Subframe and Mounting System, Removal and Installation).

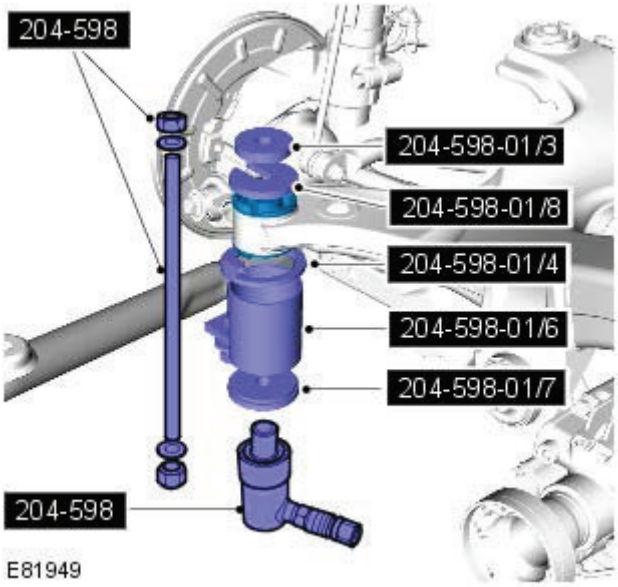

4. **4.** CAUTIONS:

   Mark the components to aid installation.

   Special tool 204-598-01/8 is used to start the bushing removal process, and must be removed after the bushing has released, as it will not pass through the subframe bushing aperture.

   Remove the bushing.

   Special Tool(s): 204-598, 204-598-01

Installation

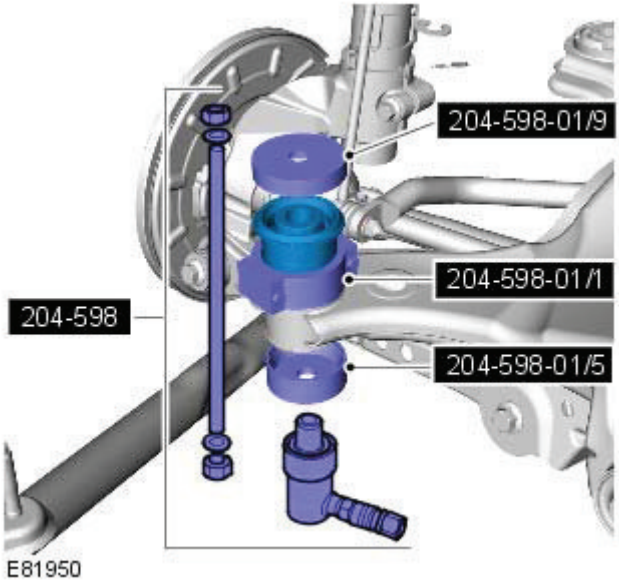

1. **1.** CAUTIONS:

   Make sure the correct special tool is used to install the bushings to the correct depth.

   Make sure that the installation marks are aligned.

   Install the bushing.

   Special Tool(s): 204-598, 204-598-01

2. Install the rear subframe assembly.

   Refer to: Rear Subframe (502-00 Uni-Body, Subframe and Mounting System, Removal and Installation).

3. Install the wheels and tires.

   Refer to: Wheel and Tire (204-04 Wheels and Tires, Removal and Installation).

Published: 11-May-2011

Uni-Body, Subframe and Mounting System - Rear Subframe Rear Bushing

Removal and Installation

Special Tool(s)

	204-598 Hydraulic Cylinder 10t
	204-598-01 Remover/Installer, Subframe Bushing Guide

Removal

• NOTE: Removal steps in this procedure may contain installation details.

1. **1.** WARNING: Make sure to support the vehicle with axle stands.

   Raise and support the vehicle.

2. Remove both rear wheels and tires.

   Refer to: Wheel and Tire (204-04 Wheels and Tires, Removal and Installation).

3. Remove the rear subframe assembly for access.

   Refer to: Rear Subframe (502-00 Uni-Body, Subframe and Mounting System, Removal and Installation).

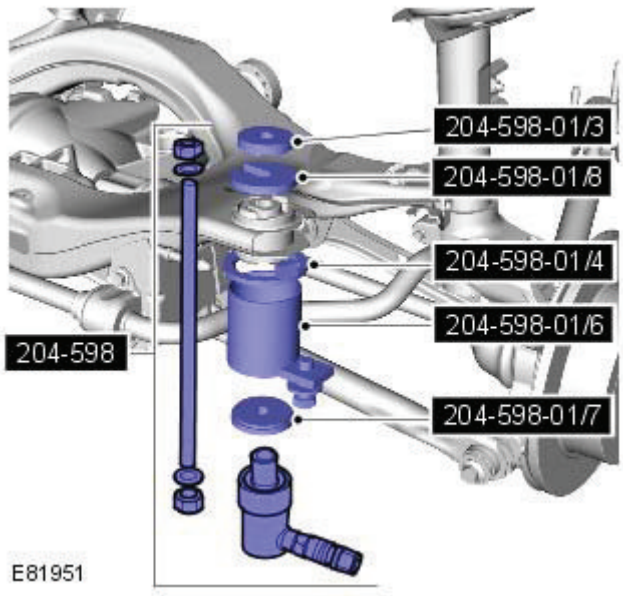

4. **4.** CAUTIONS:

   Mark the components to aid installation.

   Special tool 204-598-01/8 is used to start the bushing removal process, and must be removed after the bushing has released, as it will not pass through the subframe bushing aperture.

   Remove the bushing.

   Special Tool(s): 204-598-01

Installation

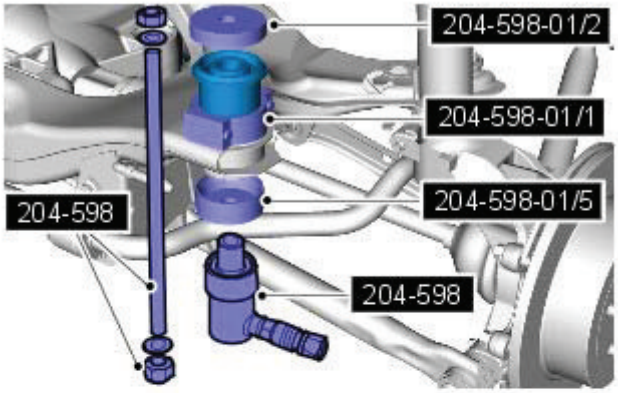

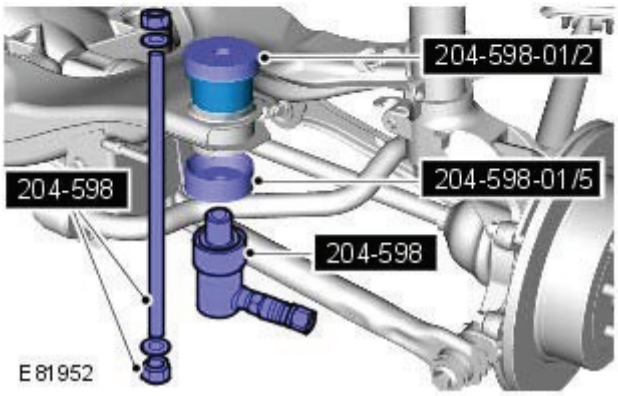

1. **1.** CAUTIONS:

   Make sure the correct special tool is used to install the bushings to the correct depth.

   Make sure that the installation marks are aligned.

   Install the bushing.

   Special Tool(s): 204-598, 204-598-01

2. Install the rear subframe assembly.

   Refer to: Rear Subframe (502-00 Uni-Body, Subframe and Mounting System, Removal and Installation).

3. Install the wheels and tires.

   Refer to: Wheel and Tire (204-04 Wheels and Tires, Removal and Installation).